RESERVDELSINFORMATION / PARTS INFORMATION

119MAXH Parts List

Ingersoll Rand 119MAXH

Originaldokument: Ingersoll Rand

Tillhandahålls av Professional Technologies Sweden AB

Original document by Ingersoll Rand, provided by
Professional Technologies Sweden AB - authorized Ingersoll Rand distributor.

Produkt / Product: skanna QR-koden · scan QR

Service · Kalibrering · Originalreservdelar

Service · Calibration · Genuine spare parts

protech.nu

protech@protech.nu · +46 303-891 35

Munkerödsvägen 5, 444 32 Stenungsund, Sverige · Org.nr 556684-8270

Ingersoll Rand och logotypen är varumärken som tillhör Ingersoll Rand Inc. Ingersoll Rand and the logo are trademarks of Ingersoll Rand Inc.

119MAX, 119MAXH Air Hammer - Exploded View

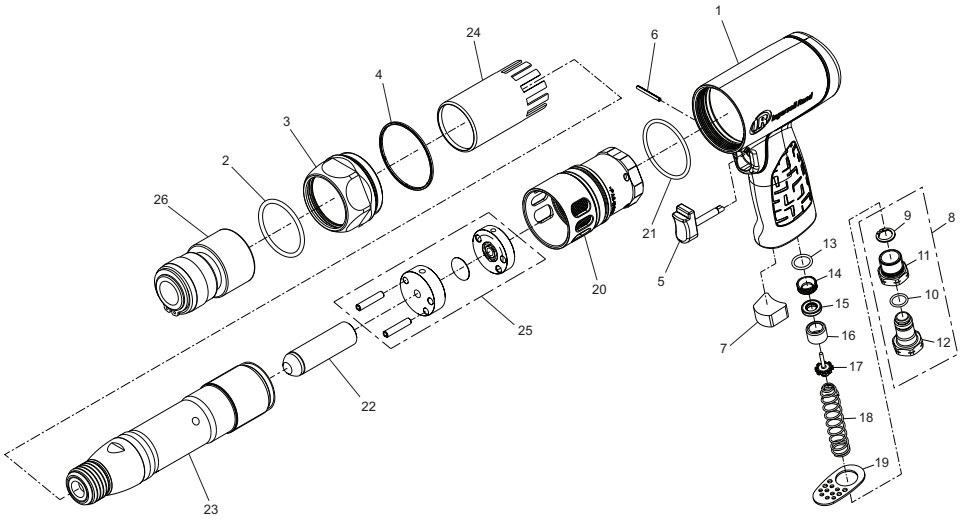

(Dwg. 47670293-1)

119MAX, 119MAXH Air Hammer - Parts List

Item	Part Description	Part Number	(CCN)	Item	Part Description	Part Number	(CCN)
	Housing Assembly			15	Valve Seal	122MAX-210	(47126040)
	for model 119MAX	119MAX-59A	(119MAX-59A)	16	Valve Bushing	122MAX-503	(47126057)
	for model 119MAXH	119MAXH-59A	(119MAXH-59A)	17	Throttle Valve	122MAX-302	(47126065)
1	Housing	---	---	18	Throttle Valve Spring	122MAX-51	(47126073)
*	Specification Label			19	Deflector	123MAX-123	(123MAX-123)
	for model 119MAX	119MAX-300	(119MAX-300)	20	Rear Cushion	123MAX-304	(123MAX-304)
	for model 119MAXH	119MAXH-300	(119MAXH-300)	21	O-Ring	122MAX-282	(47126099)
*	Warning Label	122MAX-99	(46816641)	22	Main Piston	118MAX-20	(47127816)
2	O-Ring	118MAX-65	(47127949)	23	Barrel		
3	Front Cap	119MAX-27	(119MAX-27)		for model 119MAX	118MAX-6	(47127824)
4	Gasket	122MAX-36	(47126396)		for model 119MAXH	118MAXH-6	(48484869)
5	Trigger	122MAX-93	(47125919)	24	Dust Cover	118MAX-23	(47127832)
6	Spring Pin	122MAX-121	(47125927)	25	Valve Assembly	122MAX-4A	(47126131)
7	Muffler	122MAX-311	(47125935)		Valve Unit (rear)	---	---
8	Air Inlet Assembly	529-565X	(46816047)		Valve Seal	---	---
9	Snap Ring	---	---		Valve Unit (front)	---	---
10	O-Ring	---	---		Spring Pin (QTY. 2)	---	---
11	Air Inlet	---	---	26	Quick Change Retainer	9510	(80167752)
12	Swivel Adapter	---	---	*	Chisel Set		
13	O-Ring	122MAX-168	(47126024)		for model 119MAX	9500	(80117427)
14	Valve Seat	122MAX-303	(47126032)		for model 119MAXH	116H-K5	(46816773)

* Indicates not illustrated.

123MAX, 123MAXH Air Hammer - Exploded View

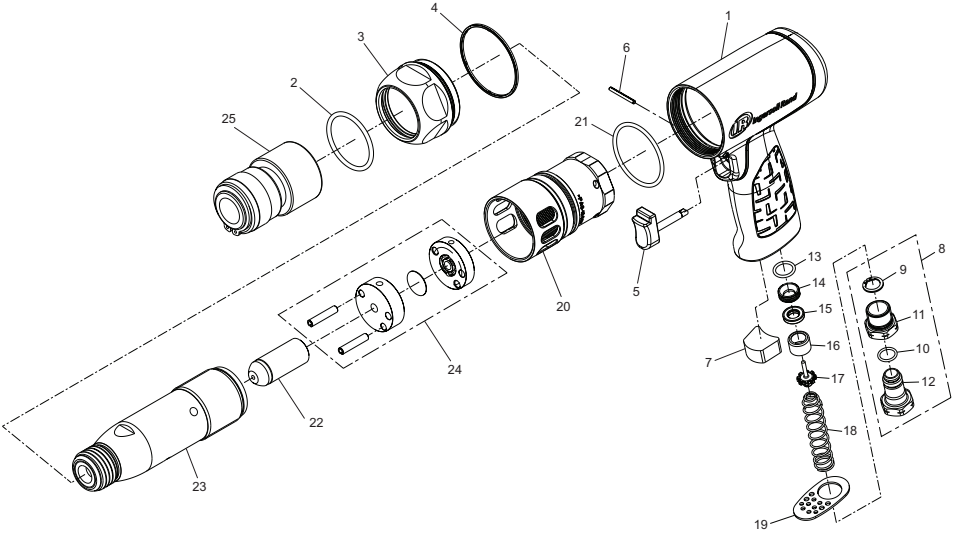

(Dwg. 47670293-2)

123MAX, 123MAXH Air Hammer - Parts List

Item	Part Description	Part Number	(CCN)	Item	Part Description	Part Number	(CCN)
	Housing Assembly			15	Valve Seal	122MAX-210	(47126040)
	for model 123MAX	123MAX-59A	(123MAX-59A)	16	Valve Bushing	122MAX-503	(47126057)
	for model 123MAXH	123MAXH-59A	(123MAXH-59A)	17	Throttle Valve	122MAX-302	(47126065)
1	Housing	---	---	18	Throttle Valve Spring	122MAX-51	(47126073)
*	Specification Label			19	Deflector	123MAX-123	(123MAX-123)
	for model 123MAX	123MAX-300	(123MAX-300)	20	Rear Cushion	123MAX-304	(123MAX-304)
	for model 123MAXH	123MAXH-300	(123MAXH-300)	21	O-Ring	122MAX-282	(47126099)
*	Warning Label	122MAX-99	(46816641)	22	Main Piston	122MAX-20	(47126107)
2	O-Ring	122MAX-65	(47126123)	23	Barrel		
3	Front Cap	123MAX-27	(123MAX-27)		for model 123MAX	122MAX-6	(47126115)
4	Gasket	122MAX-36	(47126396)		for model 123MAXH	122MAXH-6	(48484869)
5	Trigger	122MAX-93	(47125919)	24	Valve Assembly	122MAX-4A	(47126131)
6	Spring Pin	122MAX-121	(47125927)		Valve Unit (rear)	---	---
7	Muffler	122MAX-311	(47125935)		Valve Seal	---	---
8	Air Inlet Assembly	529-565X	(46816047)		Valve Unit (front)	---	---
9	Snap Ring	---	---		Spring Pin (QTY. 2)	---	---
10	O-Ring	---	---	25	Quick Change Retainer	9510	(80167752)
11	Air Inlet	---	---	*	Chisel Set		
12	Swivel Adapter	---	---		for model 123MAX	9500	(80117427)
13	O-Ring	122MAX-168	(47126024)		for model 123MAXH	116H-K5	(46816773)
14	Valve Seat	122MAX-303	(47126032)				

* Indicates not illustrated.

Parts and Maintenance

When tool life has expired, it is recommended that the tool be disassembled, degreased and parts separated by material for proper recycling.

Tool repair and maintenance should only be carried out by an authorized service center.

Refer all communications to the nearest **Ingersoll Rand** office or distributor.

Related Documentation

Manuals can be downloaded from **ingersollrandproducts.com**

For additional information, refer to:
Product Safety Information Manual 04581450
Product Information Manual 47670292001
Declaration of Conformity 47670295001

© *2019 Ingersoll Rand*

47670293001
Edition 1
November 2019