RESERVDELSINFORMATION / PARTS INFORMATION

JH40 Series Parts Info

Ingersoll Rand JH40C3

Originaldokument: Ingersoll Rand

Tillhandahålls av Professional Technologies Sweden AB

Original document by Ingersoll Rand, provided by
Professional Technologies Sweden AB - authorized Ingersoll Rand distributor.

Produkt / Product: skanna QR-koden · scan QR

Service · Kalibrering · Originalreservdelar

Service · Calibration · Genuine spare parts

protech.nu

protech@protech.nu · +46 303-891 35

Munkerödsvägen 5, 444 32 Stenungsund, Sverige · Org.nr 556684-8270

Ingersoll Rand och logotypen är varumärken som tillhör Ingersoll Rand Inc. Ingersoll Rand and the logo are trademarks of Ingersoll Rand Inc.

JH40 Jackhamer Exploded Diagram

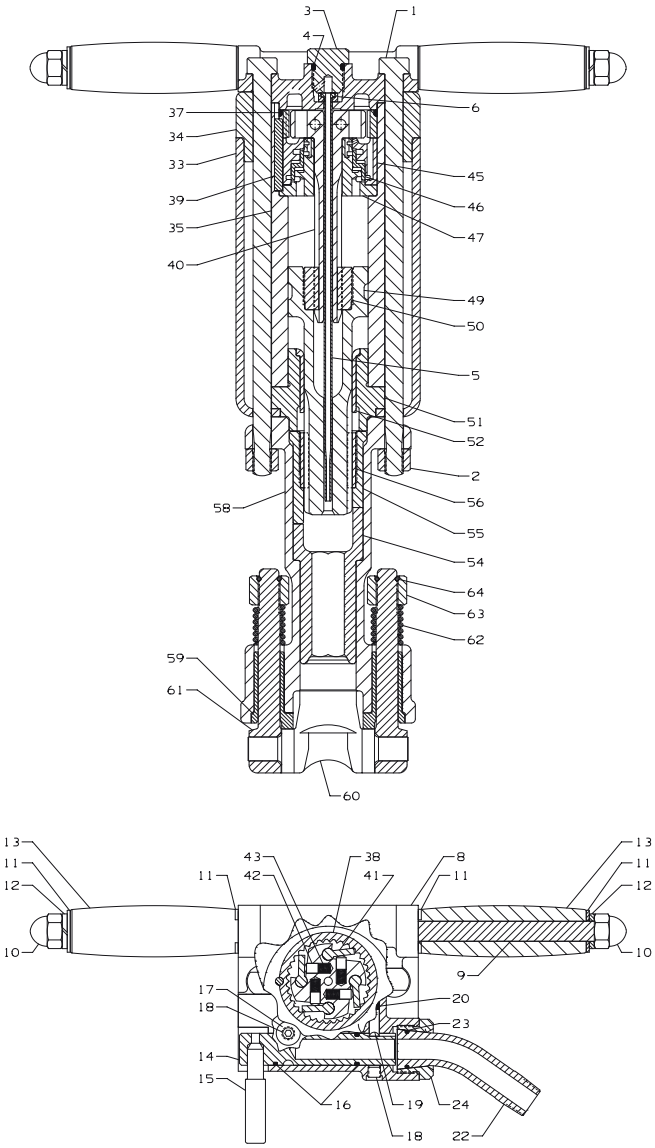

(Dwg. TPC 589)

JH40 Jackhamer Parts List

Item	Part Description	Part Number
1	Rod, Assembly (2)	50003185
2	Nut, Assembly Rod (2)	50003193
3	Retainer, Tube	50503606
• 4	O-Ring, Tube Retainer	95086526
5	Tube	50763762
• 6	Rubber, Tube	50045673
8	Handle	50924380
9	Stud, Handle	50899467
10	Nut, Crown (2)	52134608
11	Washer (4)	51948016
12	Lock Washer, Handle Bolt (2)	95210415
13	Grip Handle (2)	51716454
	Assembly, Throttle Valve	50809748
14	Valve, Throttle	50809730
15	Lever, Throttle Valve	51085637
• 16	O-Ring, Throttle Valve (2)	95018099
17	Pin, Locating	95957668
18	Plug, Handle	95049359
19	Plunger, Throttle Valve	50003748
20	Spring, Throttle Valve Plunger	50170927
22	Connection, Hose	50974013
• 23	O-Ring	95086161
24	Cap, Hose Connection	50028117
33	Muffler	50997915
*	Nameplate	MX90-34
34	Cap, Muffler	50719871
*	Warning Label	WARNING-6-99
35	Cylinder	50719889
• 37	Seal, Rotation Ratchet	50719731
• 38	Ratchet, Rotation	50719723
39	Dowel Pin, Rotation Ratchet	95385720
40	Rifle Bar	50003888
• 41	Pawl, Rotation (4)	50172386
• 42	Plunger, Rotation Pawl (4)	50172394
• 43	Spring, Rotation Pawl Plunger (4)	50173269
45	Valve, Chest	50719830
46	Valve	50006816
47	Guide, Valve	50719822

Item	Part Description	Part Number
• 49	Piston	50965987
50	Nut, Rifle	50004183
	Piston Stem Bearing Assembly	50719772
51	Bearing, Piston Stem	50719806
52	Sleeve, Piston Stem Bearing	92046598
54	Chuck	
	for JH40C1 (7/8"x3-1/4")	50014554
	for JH40C2 (7/8"x4-1/4")	50014588
	for JH40C3 (1"x4-1/4")	50014562
55	Driver, Chuck	50003375
56	Nut Chuck	50023126
58	Fronthead	
	for JH40C1	50896380
	for JH40C2 and JH40C3	50793264
59	Bushing, Fronthead (2)	50009182
60	Holder, Steel	
	for JH40C1 and JH40C2	50008945
	for JH40C3	50008960
61	Bolt, Steel Holder (2)	50009174
62	Spring, Steel Holder Bolt (2)	51357606
63	Nut, Steel Holder Bolt (2)	50009158
	64 Retainer Ring,	
	Steel Holder Bolt Nut (2)	50009190
*	Rock Drill Oil (specially formulated oil for use with34 percussive construction tools)	
†	Light Oil (for use when temperature is 90°F [32°C] or below)	
	1 gallon container	51378701
	5 gallon container	51378727
	55 gallon container	51378743
†	Light Oil (for use when temperature is above 90°F [32°C])	
	1 gallon container	51378693
	5 gallon container	51378719
	55 gallon container	51378735

* Not Illustrated.

• To keep downtime to a minimum, it is desirable to have on hand certain repair parts. We recommend that you stock one (pair or set) of each part indicated by a (•) for every four tools in service.

† Using any oil other than the oil listed may significantly reduce the life of the tool.

Parts and Maintenance

When tool life has expired, it is recommended that the tool be disassembled, degreased and parts separated by material for proper recycling.

Tool repair and maintenance should only be carried out by an authorized Service Center.

Refer all communications to the nearest **Ingersoll Rand** office or distributor.

Related Documentation

Manuals can be downloaded from ingersollrandproducts.com

For additional information, refer to:
Air Percussive Drill Product Safety Information Manual Form 04584975.
Air Percussive Drill Product Information Manual Form 51985323.
Air Percussive Drill Maintenance Information Manual Form 51991057.

© 2014 Ingersoll Rand
52086477
Edition 4
November 2014