RESERVDELSINFORMATION / PARTS INFORMATION

MX60/MX90 Series Parts Info

Ingersoll Rand MX60B · MX90B

Originaldokument: Ingersoll Rand

Tillhandahålls av Professional Technologies Sweden AB

Original document by Ingersoll Rand, provided by
Professional Technologies Sweden AB - authorized Ingersoll Rand distributor.

Produkt / Product: skanna QR-koden · scan QR

Service · Kalibrering · Originalreservdelar

Service · Calibration · Genuine spare parts

protech.nu

protech@protech.nu · +46 303-891 35

Munkerödsvägen 5, 444 32 Stenungsund, Sverige · Org.nr 556684-8270

Ingersoll Rand och logotypen är varumärken som tillhör Ingersoll Rand Inc. Ingersoll Rand and the logo are trademarks of Ingersoll Rand Inc.

51955623
Edition 15
December 2021

Paving Breaker

MX60 and MX90 Series

Parts Information

Save These Instructions

Ingersoll Rand®

MX60 Series, Paving Breaker - Sectional View

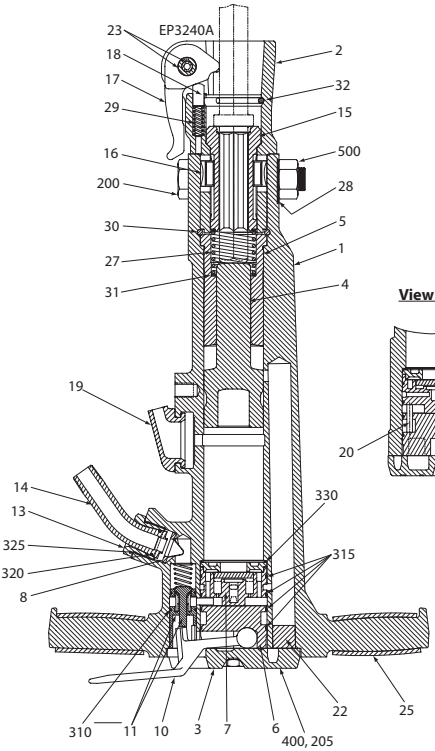

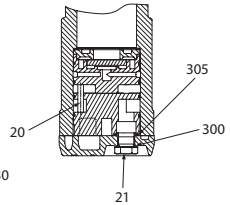

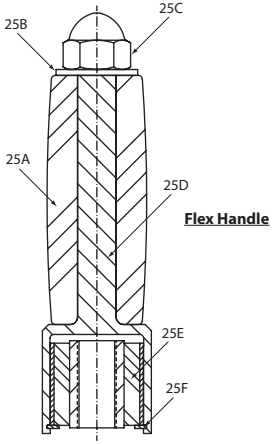

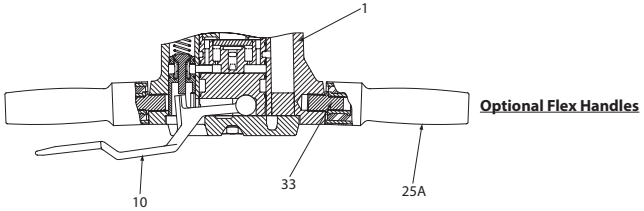

(Dwg. 16606311)

MX60 Series, Paving Breaker - Parts List

Item	Part Description	Qty	MX60A 51957207	MX60B 51957181	MX60AF 51957215	MX60BF 51957199
1	Housing	1	---	---	---	---
2	Fronthead	1	51917540	51917540	51917540	51917540
3	Backhead	1	51943447	51943447	51943447	51943447
4	Piston	1	51984615	51984615	51984615	51984615
*4	Piston	1	51999720	51999720	51999720	51999720
5	Piston Seat	1	51949907	51949907	51949907	51949907
*5	Piston Seat	1	51999738	51999738	51999738	51999738
6	Housing Plug	1	51949857	51949857	51949857	51949857
7	Valve Chest Kit	1	52082682	52082682	52082682	52082682
8	Air Strainer	1	51998367	51998367	51998367	51998367
10	Throttle Lever	1	51943017	51943017	51955565	51955565
11	Throttle Valve Kit	1	51955375	51955375	51955375	51955375
13	Air Connection Cap	1	51361798	51361798	51361798	51361798
14	Air Connection Nipple	1	51361863	51361863	51361863	51361863
15	Anvil Bushing (1-1/8 In. Hex)	1	51948131	---	51948131	---
15	Anvil Bushing (1-1/4 In. Hex)	1	---	51943470	---	51943470
16	Anvil Bushing Retainer	2	51944015	51944015	51944015	51944015
17	Latch Kit	1	51955383	51955383	51955383	51955383
18	Plunger	1	51945079	51945079	51945079	51945079
19	Exhaust Deflector	1	51729036	51729036	51729036	51729036
20	Filter	1	52089802	52089802	52089802	52089802
21	Oil Fill Plug	1	51370203	51370203	51370203	51370203
22	Rubber Plug	1	51983666	51983666	51983666	51983666
23	Roll Pin Kit	1	51792802	51792802	51792802	51792802
25	Handle Sleeve	2	51952869	51952869	---	---
25	Flex Handle	2	---	---	52084936	52084936
25A	Flex Handle Grip	2	---	---	52084902	52084902
25B	Washer	1	---	---	51948016	51948016
25C	Nut	1	---	---	95914404	95914404
25D	Handle	1	---	---	52082658	52082658
25E	Bushing	1	---	---	52091105	52091105
25F	Retaining Ring	1	---	---	95955829	95955829
27	Anvil Bushing Spring	1	51952828	51952828	51952828	51952828
28	Fronthead Washer	1	51369171	51369171	51369171	51369171
*28	Fronthead Washer	1	52080736	52080736	52080736	52080736
29	Plunger Spring	1	51952836	51952836	51952836	51952836
30	Piston Seat Retainer	1	51955862	51955862	51955862	51955862
31	Spring Seat	2	51956506	51956506	51956506	51956506
32	Anvil Bushing Retainer	1	51954337	51954337	51954337	51954337
33	Flex Handle Connector	2	---	---	51913440	51913440
*	Muffler (Furnished w/Bolt and Washer)	1	04704862	04704862	04704862	04704862
200	Fronthead Bolt (3/4)	1	95105573	95105573	95105573	95105573
*200	Fronthead Bolt (7/8)	1	95749537	95749537	95749537	95749537
205	Backhead Bolt	4	95054078	95054078	95054078	95054078
300	Oil Fill Plug O-Ring	1	95209870	95209870	95209870	95209870
305	Backhead O-Ring	1	95018107	95018107	95018107	95018107
310	Throttle Body O-Ring	2	95097705	95097705	95097705	95097705
315	Valve Chest O-Ring	2	C6H20A-103	C6H20A-103	C6H20A-103	C6H20A-103
	Housing Plug O-Ring	2	C6H20A-103	C6H20A-103	C6H20A-103	C6H20A-103
320	Connection Nipple O-Ring	1	95086161	95086161	95086161	95086161
325	Connection Cap O-Ring	1	95086112	95086112	95086112	95086112
330	Valve Cover O-Ring	1	95086583	95086583	95086583	95086583
400	Backhead Washer	4	51948016	51948016	51948016	51948016
500	Fronthead Nut (3/4)	1	95227112	95227112	95227112	95227112
*500	Fronthead Nut (7/8)	1	95477196	95477196	95477196	95477196

* Indicates not illustrated.

MX90 Series, Paving Breaker - Sectional View

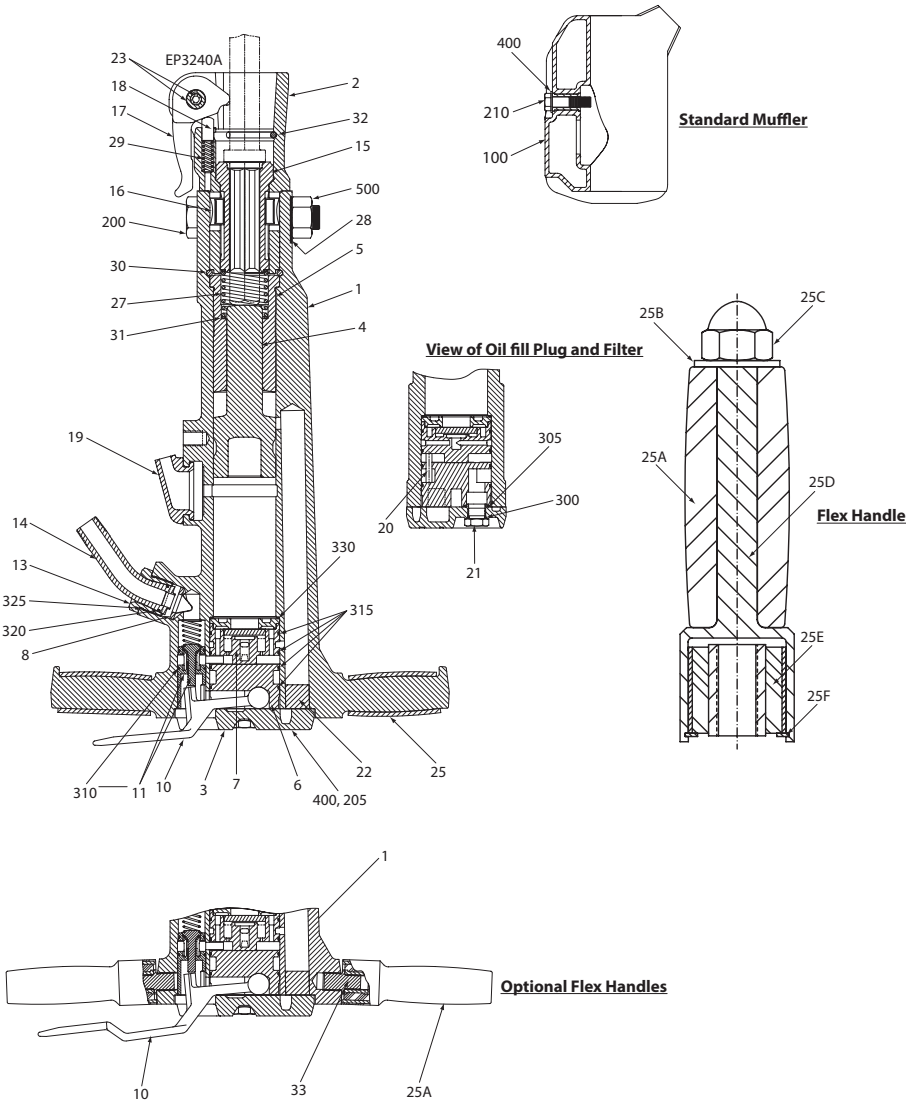

(Dwg. 16606311)

MX90 Series, Paving Breaker - Parts List

Item	Part Description	Qty	MX90A 51955136	MX90B 51955110	MX90AF 51955284	MX90BF 51955268
1	Housing	1	---	---	---	---
2	Fronthead	1	51917540	51917540	51917540	51917540
3	Backhead	1	51943447	51943447	51943447	51943447
4	Piston	1	51948388	51948388	51948388	51948388
5	Piston Seat	1	51943462	51943462	51943462	51943462
6	Housing Plug	1	51949857	51949857	51949857	51949857
7	Valve Chest Kit	1	51955391	51955391	51955391	51955391
8	Air Strainer	1	51998367	51998367	51998367	51998367
10	Throttle Lever	1	51943017	51943017	51955565	51955565
11	Throttle Valve Kit	1	51955375	51955375	51955375	51955375
13	Air Connection Cap	1	51361798	51361798	51361798	51361798
14	Air Connection Nipple	1	51361863	51361863	51361863	51361863
15	Anvil Bushing (1-1/8 In. Hex)	1	51948131	---	51948131	---
15	Anvil Bushing (1-1/4 In. Hex)	1	---	51943470	---	51943470
16	Anvil Bushing Retainer	2	51944015	51944015	51944015	51944015
17	Latch Kit	1	51955383	51955383	51955383	51955383
18	Plunger	1	51945079	51945079	51945079	51945079
19	Exhaust Deflector	1	51729036	51729036	51729036	51729036
20	Filter	1	52089802	52089802	52089802	52089802
21	Oil Fill Plug	1	51370203	51370203	51370203	51370203
22	Rubber Plug	1	51944007	51944007	51944007	51944007
23	Roll Pin Kit	1	51792802	51792802	51792802	51792802
25	Handle Sleeve	2	51952869	51952869	---	---
25	Flex Handle	2	---	---	52084936	52084936
25A	Flex Handle Grip	2	---	---	52084902	52084902
25B	Washer	1	---	---	51948016	51948016
25C	Nut	1	---	---	95914404	95914404
25D	Handle	1	---	---	52082658	52082658
25E	Bushing	1	---	---	52091105	52091105
25F	Retaining Ring	1	---	---	95955829	95955829
27	Anvil Bushing Spring	1	51952828	51952828	51952828	51952828
28	Fronthead Washer	1	51378438	51378438	51378438	51378438
29	Plunger Spring	1	51952836	51952836	51952836	51952836
30	Piston Seat Retainer	1	51955862	51955862	51955862	51955862
31	Spring Seat	2	51956506	51956506	51956506	51956506
32	Anvil Bushing Retainer	1	51954337	51954337	51954337	51954337
33	Flex Handle Connector	2	---	---	51913440	51913440
*	Muffler (Furnished w/Bolt and Washer)	1	51953453	51953453	51953453	51953453
200	Fronthead Bolt (1")	1	95379608	95379608	95379608	95379608
205	Backhead Bolt	4	95054078	95054078	95054078	95054078
300	Oil Fill Plug O-Ring	1	95209870	95209870	95209870	95209870
305	Backhead O-Ring	1	95018107	95018107	95018107	95018107
310	Throttle Body O-Ring	2	95097705	95097705	95097705	95097705
315	Valve Chest O-Ring	2	C6H20A-103	C6H20A-103	C6H20A-103	C6H20A-103
	Housing Plug O-Ring	2	C6H20A-103	C6H20A-103	C6H20A-103	C6H20A-103
320	Connection Nipple O-Ring	1	95086161	95086161	95086161	95086161
325	Connection Cap O-Ring	1	95086112	95086112	95086112	95086112
330	Valve Cover O-Ring	1	95086583	95086583	95086583	95086583
400	Backhead Washer	4	51948016	51948016	51948016	51948016
500	Fronthead Nut	1	95471165	95471165	95471165	95471165

* Indicates not illustrated.

Lubrication (not provided with the tool)

- SAE 20 light oil recommended for temperatures below 20 degrees Fahrenheit.
- SAE 30 medium oil recommended for temperatures between 20 and 90 degrees Fahrenheit.
- SAE 50 heavy oil recommended for temperatures above 90 degrees Fahrenheit.

Available Kits

Part No.	Part Description	Qty.
52082682	Valve Chest Kit	1
51955391	Valve Chest Kit	1
51955375	Throttle Valve Kit	1
51955383	Latch Kit	1
51792802	Roll Pin Kit	1

Parts and Maintenance

When tool life has expired, it is recommended that the tool be disassembled, degreased and parts separated by material for proper recycling.

Tool repair and maintenance should only be carried out by an authorized Service Center.

Refer all communications to the nearest **Ingersoll Rand** office or distributor.

Related Documentation

Manuals can be downloaded from **ingersollrand.com**

For additional information, refer to:

Product Safety Information Manual 04581450
Product Information Manual 51955631
Maintenance Information Manual 51984144
Declaration of Conformity 47759528001

Notes:

ingersollrand.com

© 2021 Ingersoll Rand