Professional Technologies Sweden AB

Auktoriserad Ingersoll Rand-distributör · Authorized Ingersoll Rand distributor

BRUKSANVISNING / USER MANUAL

150T GF Series Installation and Maintenance 04580205

Ingersoll Rand 150TMGF21RH6-02O

Originaldokument: Ingersoll Rand

Tillhandahålls av Professional Technologies Sweden AB

Original document by Ingersoll Rand, provided by
Professional Technologies Sweden AB - authorized Ingersoll Rand distributor.

Produkt / Product: skanna QR-koden · scan QR

Service · Kalibrering · Originalreservdelar

Service · Calibration · Genuine spare parts

protech.nu

protech@protech.nu · +46 303-891 35

Munkerödsvägen 5, 444 32 Stenungsund, Sverige · Org.nr 556684-8270

Ingersoll Rand och logotypen är varumärken som tillhör Ingersoll Rand Inc. Ingersoll Rand and the logo are trademarks of Ingersoll Rand Inc.

Form P7706
04580205
Edition 2
May 2009

Turbine Powered Starter

150T( )GF Series

Installation and Maintenance Information

Save These Instructions

Ingersoll Rand

Product Safety Information

Intended Use:

Series 150TMG Turbine Powered Air Starters are designed for cranking diesel and natural gas fueled internal combustion engines.

For Additional information refer to Air Starters Product Safety Information Manual Form 45558624.
Manuals can be downloaded from www.irtools.com.

Lubrication

80W90 Hypoid Gear Oil

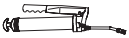

Ingersoll Rand No. 130 Grease

WARNING

Do not grease excessively; too much grease may cause the gearcase to overheat.

Operating Guideline

WARNING

When cranking attempts fail to start the engine in 30 seconds, stop and allow the starter to cool for 2-1/2 minutes before attempting to start the engine.

Model Coding

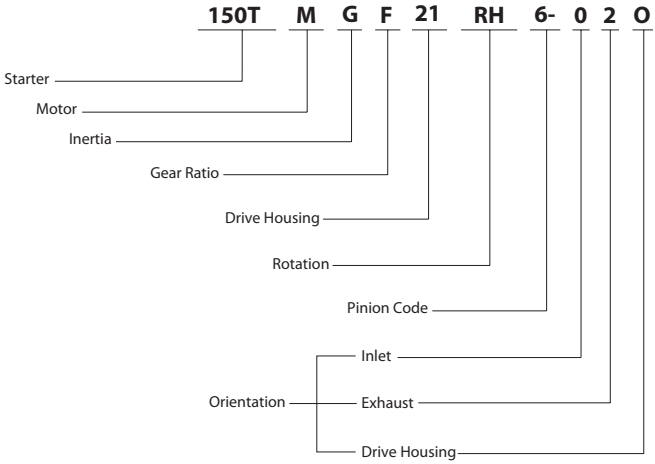

Pinion Data

Pinion Code	Number of Teeth	Blank	DP/MOD	PD		PA	Rotation	OD	
				inches	mm			inches	mm
5	12	12	8/10	1.625	41.28	20°	R	1.75	44.45
6	11	12	6/8	2	50.8	20°	R	2	50.8
11	11	12	6/8	2	50.8	20°	L	2	50.8

Other models available. Contact your **Ingersoll Rand** representative.

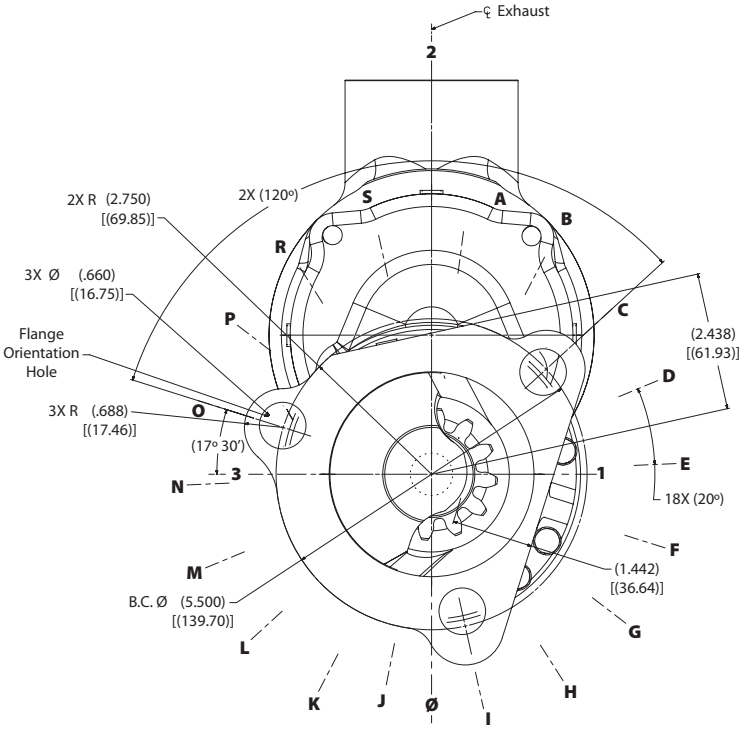
℄ Exhaust
2
2X (120º)
S
A
B
2X R (2.750)
[(69.85)]
R
3X Ø (.660)
[(16.75)]
P
C
Flange
Orientation
Hole
(2.438)
[(61.93)]
D
3X R (.688)
[(17.46)]
O
(17º 30')
3
1
E
N
18X (20º)
F
M
(1.442)
[(36.64)]
B.C. Ø (5.500)
[(139.70)]
G
L
H
K
J
Ø
I

(Dwg. TP1928)

Installation

Always make certain your air starter is properly installed. For maximum performance, read this manual prior to the installation or operation of Series 150T Turbine-Powered Starters.

General Information

1. It is strongly recommended that on all vehicular installations, and on stationary engines subject to vibration, that hoses of the specified diameter be used instead of rigid pipe connections to the starter. Vehicle and engine vibration will soon loosen rigid pipe connections, whereas hoses will absorb the vibration, and connections will remain tight.
2. The starter is designed for either flange, or threaded pipe, mounting at the inlet. The optional Flange Mounting Kit is required for installation. All piping, hoses and valving must be clean prior to installation. Make sure that the starter inlet remains free of dirt and foreign material during installation.
3. In the actual mounting of a starter, it may be best to have the starter end of the hose handy for attaching to the starter.
4. Engine design often demands that the starter be mounted underneath in extremely close quarters, and even though two of the mounting bolt holes are easy to reach, the third one is often less accessible. To install a starter, the following tools are required: regular ratchet wrench, sockets, universal joint, socket extension and a single or double-end box wrench.
5. The efficiency of an Air Starter can be greatly impaired by an improper hook-up. Hoses smaller than those recommended will reduce the volume of air to the motor and the use of reducers for piped away applications in the exhaust port will restrict the exhaust causing back pressure to the motor resulting in reduced performance. The number of tees, elbows, and the length of the supply line, should be kept to a minimum. Use 1-1/4" hose or pipe for supply lines up to 15 feet (4.6 m) long; use 1-1/2" hose or pipe if the supply line is over 15 feet (4.6 m) long.
6. A leak in any of the connections in live air lines means that the system will drain overnight and will have to be re-pressurized the next morning by use of another vehicle or compressor. Make your connections bubble tight to avoid unnecessary costs and delays. On all threaded connections throughout the system, use Ingersoll Rand No. SMB- 441 Sealant, non-hardening No. 2 Permatex or Loctite* Pipe Sealant.
7. After all connections have been made, check each joint with a soap bubble test. There must be no leaks in live air lines. The slightest leak will cause the system to lose pressure overnight. Always run the air supply line from the side or top of the receiver, never at or near the bottom. Moisture in the air collects at the bottom of the receiver resulting in damage, which could cause the valves to become inoperative. Periodically open the petcock at the bottom of the tank to drain the water.
8. Whenever a hazardous gas is being used to operate the starter, there must be no leaks in inlet or exhaust piping or from any other starter joints. All discharges should be piped away to a safe area.
9. Whenever possible, always mount the air starter so that the exhaust port is pointed downward. This will help prevent any accumulation of water in the starter motor.
10. We recommend installation of a "glad hand" for emergency re-pressurizing of the system. To keep the "glad hand" clean and free of dirt and to protect it from damage, a second "glad hand" closed by a pipe plug can be mated to it, or a "glad hand" protector bracket can be used.
11. It is recommended that a strainer be installed in the inlet line for each starter. Ingersoll Rand offers 5 strainers: ST900-267-24 for 1-1/2" lines, ST900-267-32 and ST900-267-32F for 2" lines, ST900-267-48 for 3" lines and ST900-267-64 for 4" lines. These 300 mesh strainers provide 50-micron filtration and offer significant protection against supply line contaminates which could damage the turbine components. Replacement elements are ST900-266-24 for 1-1/2", ST900-266-for 2" pipe, ST-266-for 2" flange, ST900-266-48 for flange, and ST900-266-64 for 4" lines.

Orientation of the Starter

It is recommended that starters be ordered in the proper orientation for your specific mounting requirements. However, if the starter must be reoriented for installation, proceed as follows:

1. Refer to the dimension illustration on pages 4 and 5 and note that the Drive Housing (39) can be located in any one of eighteen radial positions relative to the Gear Case. The exhaust port [Motor Housing (6)] can be located in any one of four radial positions relative to the Gear Case, and the air inlet [Motor Housing Cover (3)] can be located in any one of four radial positions relative to the exhaust port.
2. Study the engine mounting requirements, and determine the required orientation of the Drive Housing (47) relative to the Gear Case (24). If the Drive Housing has to be reoriented, remove the nine Drive Housing Cap Screws (51) and rotate the Drive Housing to its required position. Separation of the Drive Housing from the Gear Case is not required. Reinstall the Drive Housing Cap Screws and tighten to 100 in-lb (11 Nm) torque.
3. After the Drive Housing is properly oriented relative to the Gear Case, determine if the inlet port will be favorably located for hose installation. If either or both of these members must be reoriented, use a 9/16" wrench to remove the four Motor Housing Cover Cap Screws (1), and rotate the Motor Housing (6) and/or Motor Housing cover (3) to the desired position

NOTICE

Do not separate the Motor Housing from the Intermediate Gear Case, as gear lubrication oil will be lost.

Reinstall the Motor Housing Cover Cap Screws and alternately tighten them to 25 ft-lb (34 Nm) torque in 10 ft-lb (14 Nm) increments.

Mounting the Starter

1. Study the appropriate piping diagrams on pages 6 and 7 and install as indicated.
2. The air receiver tank for a starter installation must have a working pressure rating equal to or greater than the maximum pressure at which the starter will be operated.
3. When connecting the starter to a receiver tank that is already in service, bleed off the air pressure in the tank prior to installing the starter.

⚠ WARNING

Bleed off the air pressure through a valve or petcock. Do not remove a plug from the tank while the tank is pressurized.

Drain off any water that may have accumulated in the bottom of the tank.

4. Using a 1-1/4" short nipple, install the SRV125 Starter Relay Valve on the end of the receiver tank as shown in the piping diagram.

NOTICE

Make certain the connection is made to the inlet side of the Relay Valve indicated by the word "IN" cast on the valve body.

5. For air installations, install the Starter Control Valve (SMB-618) on the dash panel (for vehicular installations) or some other appropriate panel (for stationary installations). An optional control circuit, utilizing an electric solenoid control valve and a panel mounted switch, is also available. Mount the 12V Solenoid Valve (150BMP-1051B), or appropriate voltage solenoid, securely and, preferably, in a vertical position away from any concentration of heat, vibration or contamination. Connect the leads to the operator's starting switch, which should be located on the dashboard or control panel.
6. Attach Starter Instruction Label (TA-STR-100) to control panel adjacent to the Starter Control Valve.

7. Mount the Air Pressure Gauge (150BMP-1064) on or adjacent to the control panel. It should be located where it is readily visible to the operator.
8. Connect the Starter Control Valve to the Relay Valve with 1/4" hose. Install a tee in this line with a short feeder hose to the Pressure Gauge.

NOTICE

Make certain the hose is connected to the supply side (marked "SUP") of the Starter Control Valve.

9. To determine the exact length of 1/4" air hose required, run a piece of heavy duty hose, or some other flexible tubing of the same diameter, from the Relay Valve on the receiver to the starter location on the engine.
10. Attach the 1/4" air hose to the outlet side of the Relay Valve, and run the hose through the frame, etc. to its final position at the starter location.
11. At this point, determine whether or not it is feasible or practical to attach the hose to the starter before or after the starter is actually mounted. In some cases it may be necessary to attach the hose to the starter before mounting.
12. If possible, liberally grease the teeth on the ring gear with a good quality sticky gear grease. This will help promote the life of the ring gear and the starter pinion.
13. Move the starter into position, and mount it on the flywheel housing. Tighten the mounting bolts to 100 ft-lb (136 Nm) torque.
14. For Pre-Engaged Models, install a 1/4" hose line from the delivery side (marked "DEL") of the Starter Control Valve or Solenoid Valve to the "IN" port on the Starter Drive Housing.

NOTICE

Inadvertent application of air pressure to the "OUT" port will result in Drive malfunction (Pinion will fail to retract). If this condition occurs, loosen Drive Housing Cap Screws (51) to vent Gear Case (24). Also, loosen Housing Plugs (4) and (14) to vent motor.

15. Install a 1/4" hose line from the "OUT" port on the Starter Drive Housing to the small pipe tapped portion top of the Starter Relay Valve or Solenoid Valve.
16. If the exhaust is to be piped away, attach appropriate piping to the exhaust outlet on the motor housing.
17. Pressurize the complete starting system and check every connection with a soap bubble test. There must be no leaks in live air lines or other connections.

Mounting Dimensions

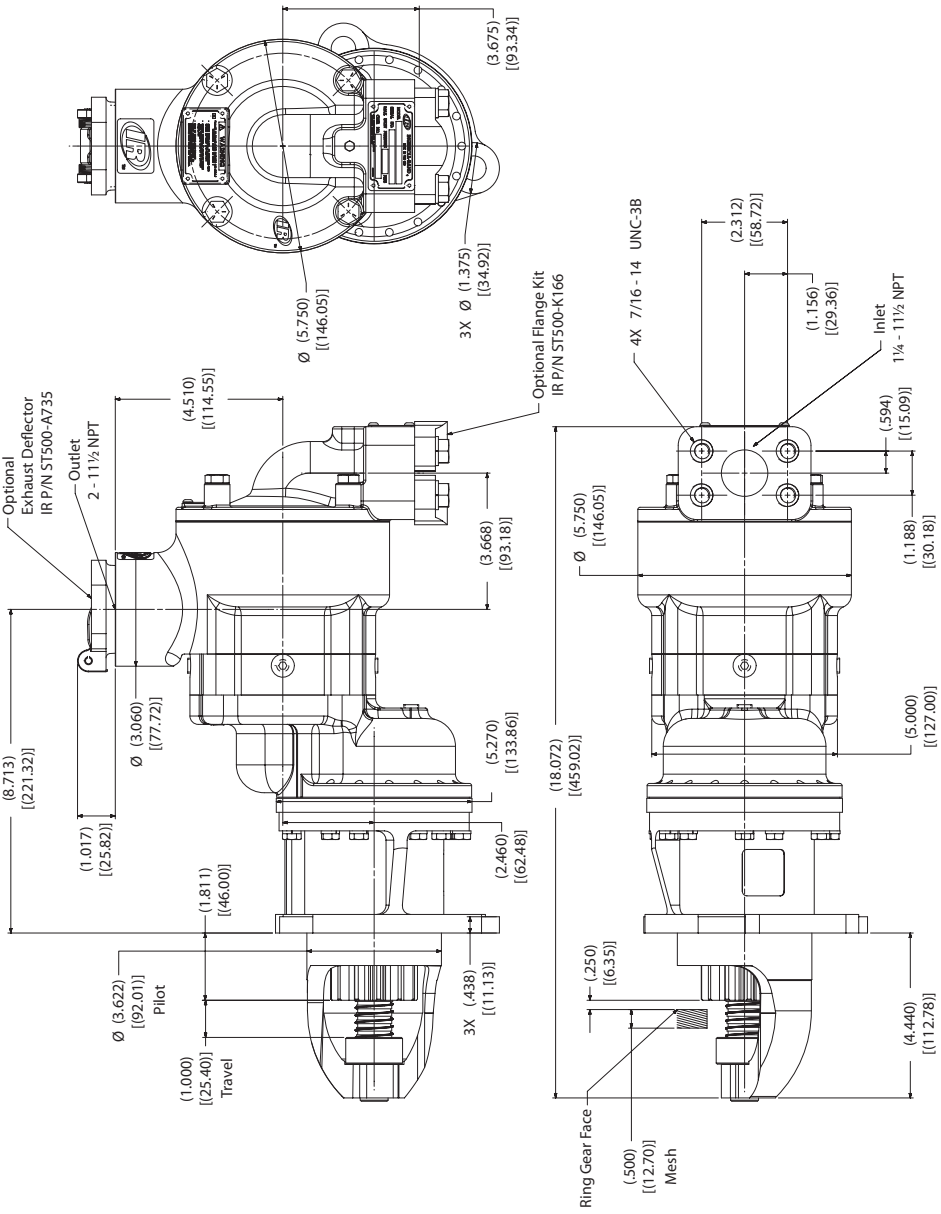

(Dwg. TP1929)

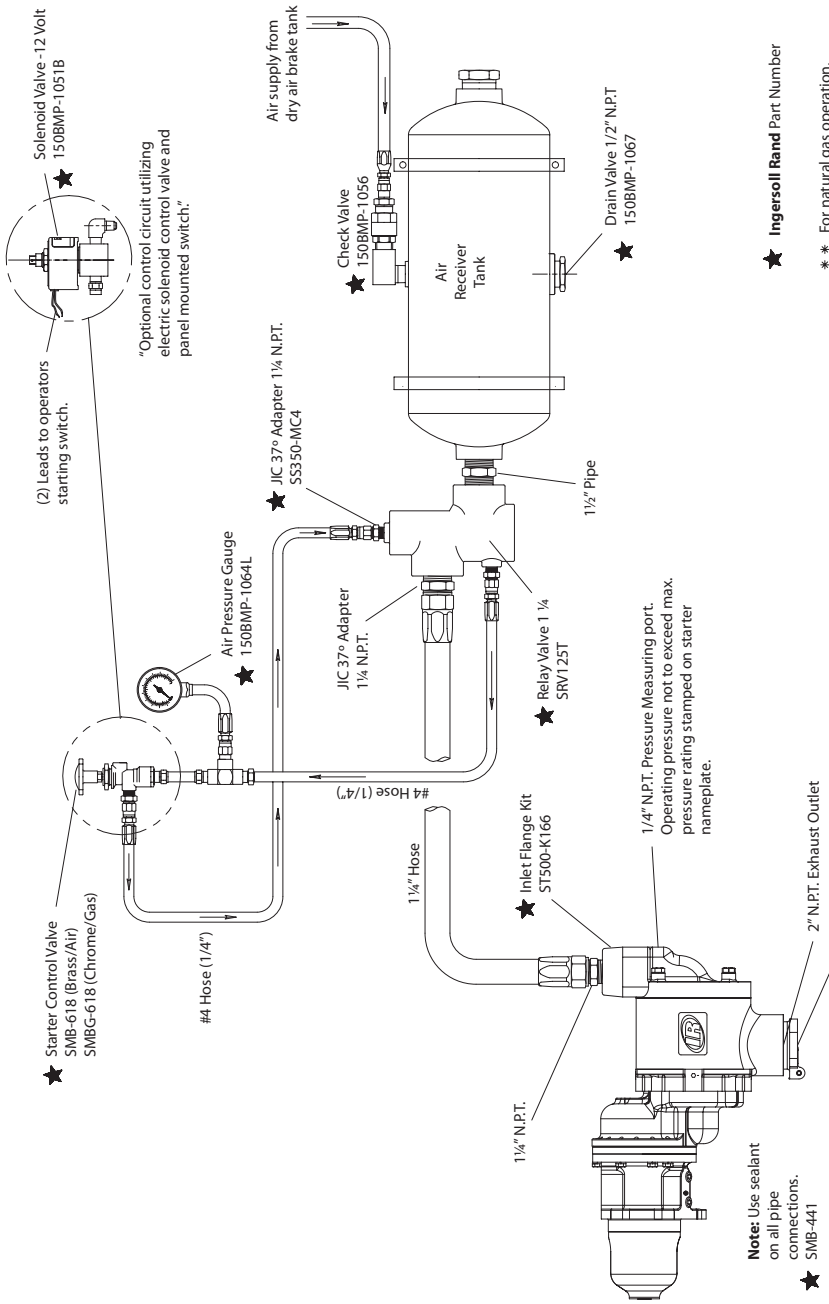
Solenoid Valve -12 Volt
150BMP-1051B
(2) Leads to operators starting switch.
"Optional control circuit utilizing electric solenoid control valve and panel mounted switch."
Air supply from dry air brake tank
Check Valve
150BMP-1056
Air Receiver Tank
Drain Valve 1/2" N.P.T
150BMP-1067
Ingersoll Rand Part Number
* * For natural gas operation, start main exhaust must be piped away.
JIC 37° Adapter 1¼ N.P.T.
SS350-MC4
1½" Pipe
Air Pressure Gauge
150BMP-1064L
JIC 37° Adapter
1¼ N.P.T.
Relay Valve 1 ¼
SRV125T
1/4" N.P.T. Pressure Measuring port. Operating pressure not to exceed max. pressure rating stamped on starter nameplate.
#4 Hose (1/4")
Starter Control Valve
SMB-618 (Brass/Air)
SMBG-618 (Chrome/Gas)
#4 Hose (1/4")
1¼" Hose
Inlet Flange Kit
ST500-K166
2" N.P.T. Exhaust Outlet
Exhaust Defelector
ST500-A735 * *
1¼" N.P.T.
Note: Use sealant on all pipe connections.
SMB-441

(Dwg. TP1930)

Series 150 T( )GF Turbine Powered Starter (Exploded Views)

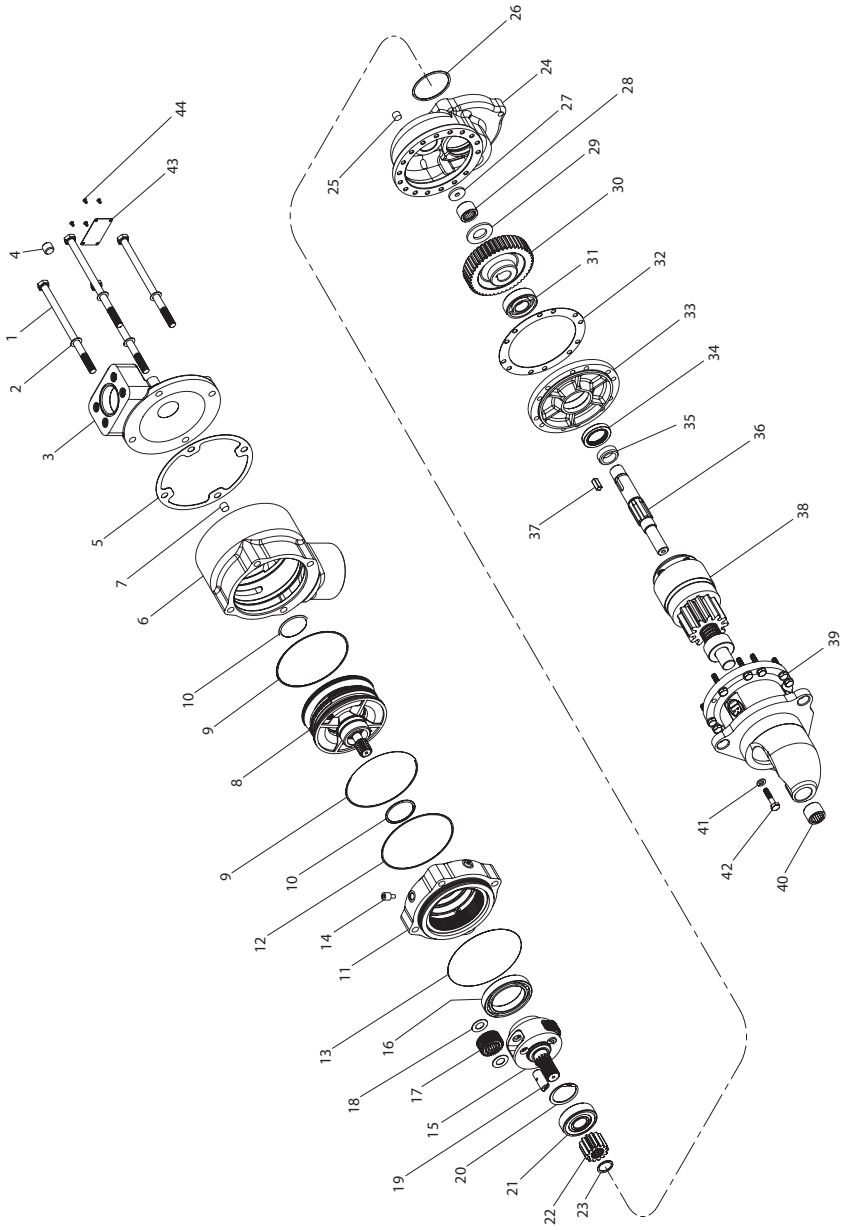

(Dwg. TP1912)

Series 150 T( )GF Turbine Powered Starter (Cross-Section and End Views)

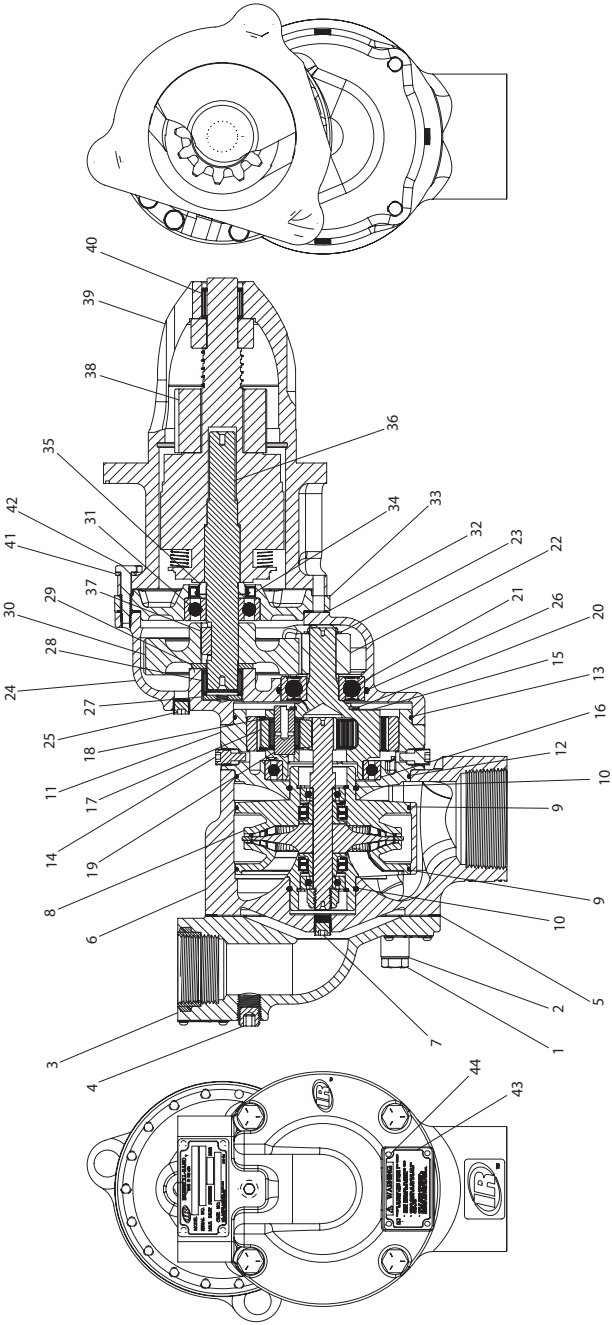

Series ST150T( )GF Series Turbine Powered Starter - Part List

Item	Part Description	Part Number
1	Cap Screw (4 required)	107-25
2	Washer Lock (4 required)	D02-504
3	Inlet Cover	ST500-202
4	Plug	HSPPS-2
5	Gasket	ST500-283 * and **
6	Motor Housing	ST500-40
7	Pipe Plug	R2-227
8	Motor Assembly	---
	Motor Assembly, 150TMG, RH	150TMFR-A53
	Motor Assembly, 150TMG, LH	150TMFL-A53
	Motor Assembly, 150TLG, RH	150TLFR-A53
	Motor Assembly, 150TLG, LH	150TLFL-A53
	Motor Assembly, 150TJG, RH	150TJFR-A53
	Motor Assembly, 150TJG, LH	150TJFL-A53
9	O-ring (2 required {included with Motor Assembly})	ST800-152 * and **
10	O-ring (2 required {included with Motor Assembly})	Y325-29 * and **
11	Gearcase Assembly	150TMF-A37
12	O-ring (2 required {included with Gearcase Assembly})	SS800-152 * and **
13	O-ring (2 required {included with Gearcase Assembly})	Y325-46 * and **
14	Plug, Magnetic Drain (2 required)	150T-29
---	Gearhead Assembly	150TMF-A108B
15	Gearhead (included with Gearhead Assembly)	150TMF-108B
16	Bearing (included with Gearhead Assembly)	ST500-23
17	Planet Gear (3 required {included with Gearhead Assembly})	150TMF-A10B
18	Spacer (6 required {included with Gearhead Assembly})	42364
19	Shaft (3 required {included with Gearhead Assembly})	ST500-191B
20	Retaining Ring (included with Gearhead Assembly)	ST500-323
21	Bearing (included with Gearhead Assembly)	ST500-105
22	Pinion	150BME-17
23	Retaining Ring	ST500-69
24	Gearcase	10BM-X37
25	Plug	R2-227
26	O-ring	ST500-137 * and **
27	Washer	10BM-25
28	Needle Bearing	150BM-399 **
29	Washer	10BM-15
30	Drive Gear	150BME-9
31	Bearing	T02-33 **
32	Gasket	10BM-284 * and **
33	Cover, Gearcase	10BM-478
34	Seal	150BMP-271 * and **
35	Collar	10BM-30
36	Shaft	10BM-8
37	Key	10BM-610
38	Starter Drive	---
	Right Hand Rotation (12 Tooth)	10BM-299-22
	Right Hand Rotation (11 Tooth)	10BM-299-21
	Left Hand Rotation (11 Tooth)	10BM-299-19
39	Drive Housing	9BM-300-H2
40	Needle Bearing	ML50K-318 **
41	Washer, (12 Required)	10BM-67
42	Cap, Screw (12 required)	10BM-744
43	Warning Tag	150T-302
44	Screw (4 required)	Y60-43

* Indicates parts available only in Seal Kit
** Indicates parts available only in Tune Up Kit

Optional Equipment - Part List

Item	Part Description	Part Number
†	Seal Kit (includes all parts shown with*)	150TMG-SK1
†	Tune-up Kit (includes all parts shown with **)	150TMG-TK1
†	Flange Kit - 1.1/4" Pipe	ST500-K166
†	Muffler	150T-312
†	Deflector Assembly	ST500-A735
†	Exhaust Tube Kit	ST500-K740
†	Pipe Sealant	SMB-441
†	Solenoid Valve (12 V)	150BMP-1051B
†	Solenoid Valve (24 V)	150BMP-2451B
†	Starter Control Valve	SMB-618
†	Relay Valve	SRV-125
†	Check Valve	150BMP-1056
†	Check Relief Valve	150BMP-1054

† Item Not Shown

Maintenance Section

WARNING

Always wear eye protection when operating or performing maintenance on this tool.
Always turn off the air supply and disconnect the air supply hose before installing, removing or adjusting any accessory on this tool or before performing any maintenance on this tool.

Note: When reading the instructions, refer to exploded diagrams in parts Information Section (page no. 6 and 7) when applicable (see under Related Documentation for form numbers).

Lubrication

Each time a Series 150T Starter is disassembled for maintenance or repair, re-lubrication of key components is required. The following list summarizes the lubricants required when performing maintenance on the starter. Refer to the appropriate section for additional details on the task you are attempting to perform.

For All Models:

1. Lubricate all O-rings with O-ring lubricant before assembly.
2. Fill the intermediate gear case (13) with 55 ml (1.9 fl.oz.) of 80W90 gear oil. Do not overfill.
3. Lubricate the rear motor bearing through the fill plug (4) with 7 ml (0.24 fl. oz.) of 80W90 hypoid gear oil. Do not overfill.
4. Approximately 0.24 kg (8 fl. oz.) of **Ingersoll Rand** No. 130 grease is required to lubricate the gears in the offset gear case.
5. Wipe a thin film of **Ingersoll Rand** No. 130 Grease on the Drive Gear Thrust Washer (29).
6. Drive housing and components are lubricated with **Ingersoll Rand** No. 130 grease during assembly. See assembly instructions for details.

NOTICE

On models with inertia drive, do not lubricate the threaded area of the Drive Shaft (36) as it could collect dirt and foreign material that could impair efficient operation.

Disassembly of the Starter

General Instructions

1. Always mark adjacent parts on the Motor Housing Cover (3), Motor Housing (3), Gear Case (11), Offset Gear Case (24) and Drive Housing (39) so these members can be located in the same relative position when the Starter is reassembled.
2. Do not disassemble the starter any further than necessary to replace a worn or damaged part.
3. Do not remove any part, which is a press fit in or on a subassembly unless the removal of that part is necessary for replacement or repairs.
4. Always have a complete set of seals and O-rings on hand before starting any overhaul of a 150T starter. Never reuse old seals or gaskets.
5. When grasping a part in a vise, always use leathercovered or copper-covered vise jaws to protect the surface of the part and help prevent distortion. This is particularly true of threaded members.
6. Never wash the Inertia Drive in a solvent.
7. Do not remove any needle bearing from a press fit unless you have a new needle bearing on hand for installation. Needle bearings are always damaged during the removal process.

Disassembly of the Housing Cover, Motor Assembly, and Motor Housing

1. If replacing the Motor Assembly (8), remove two of the housing Plugs (14) and drain the oil from the gearing before beginning disassembly of the starter. Inspect the magnetized portion of the housing Plug (14) for metal particles. Very fine metal particles are normal. Remove particles and reinstall Plugs. Repeat for the other two Plugs. Large particles or chips are an indication of a problem. If found disassemble the gear case and inspect.
2. Using a 9/16" SAE box or open-end wrench, unscrew and remove the four (4) Starter Assembly Cap Screws (1) and Washers (2).
3. Pull the Inlet Cover (3) from the Motor Housing (6).
4. Remove the drain plug from the rear motor bearing oil reservoir and drain the oil.
5. Holding the Intermediate Gear Case (11), remove the Motor Housing by tapping it on the exhaust outlet with a plastic hammer or mallet. This operation is simplified if the Starter can be positioned on a work bench vertically, resting on the engine mounting flange.
6. Remove the Motor Assembly (8) by grasping the Pinion Gear and pulling the Motor Assembly from the Motor Housing. If difficulty is encountered removing the Motor Assembly place the motor and housing on a suitable support that will allow the Motor Assembly to be dropped out of the housing. Insert a suitable flatbottomed punch, approximately 3/16" diameter through the oil fill port on the back of the Motor Housing. Lightly tap the punch with a mallet to drive the Motor Assembly out of the housing. It is important to maintain alignment of the punch with the motor during this operation. It is also important to protect the motor from dropping out of the housing unexpectedly.
7. Remove the Intermediate Gear Case (11) by gently tapping it around the circumference, with a plastic hammer or mallet, upward to remove it from the Offset Gear Case.
8. In the event that the Planetary Gear Frame (15) is retained, by the Offset Gear Housing, it must be removed separately. Position two suitable pry bars on opposite side in between the Gear Frame and the Offset Gear Case. Using equal pressure gently lift the Gear Frame out of the Offset Gear Case. The pry bars may have to be repositioned around the circumference several times to complete the task.

Disassembly of the Offset Gear Case

1. Set the Gear Case and Drive Housing unit upright on the workbench with the Drive Housing (39) upward.
2. Remove the Drive Housing Cap Screws (42) and lift off the Drive Housing, Drive Gear and Starter Drive.
3. Thread a 5/16"-18 cap screw into the tapped hole in the Offset Gear Case and drive the Bearing Ejecting Washer out. This will drive the Drive Shaft Rear Bearing from the Offset Gear Case.

Disassembly of the Drive Housing

1. With the Drive Housing unit lying on the workbench, grasp the Drive Gear (30) and pull the assembled Drive Shaft (36) from the Starter Drive (38).
2. If the Drive Gear must be removed from the Drive Shaft, support the Drive Gear on the table of an arbor press, and press the Drive Shaft from the Drive Gear. Remove the Drive Gear Key (37).
3. Stand the Drive Shaft assembly, bearing end up, in a sleeve that contacts the Drive Shaft Collar (35), and press the Drive Shaft from the bore of the Drive Shaft Front Bearing (31).

4. Position the Drive Housing (39) vertically, grasping the Gear Case Cover (33) in leather-covered or coppercovered vise jaws. Tap the underside of the Drive Housing mounting flange with a soft hammer to dislodge the Drive Housing from the Gear Case Cover. Lift off the Drive Housing. The Starter Drive will probably remain with the Drive Housing; make certain that it does not fall on the floor. Do not remove the Drive Shaft Grease Seal (34) from the Gear Case Cover unless it is absolutely necessary and you have a new Seal on hand. If the Seal must be removed, press it from the Gear Case Cover.
5. Do not remove the Drive Housing Bearing (40) from the Drive Housing unless you have a new Bearing on hand. If the Bearing must be removed, press it from the Drive Housing.

Cleaning the Parts

Once the Starter has been disassembled, clean all parts for inspection.

1. Wipe all dirt, grease, etc. from the Starter Drive and sealed bearings. Do not wash these parts in kerosene or other solvent, as this will dilute and contaminate any sealed-in lifetime lubricant.
2. Wash all parts except the Start Drive or any sealed bearing in clean kerosene or other solvent. Dry the parts with compressed air.

Inspection of Parts

1. Discard all O-rings and gaskets. These should not be reused.
2. Check all grease seals. If these appear worn or distorted, remove them from their parent member and discard. Discard any grease seal that was removed during disassembly of the Starter.
3. Check all needle bearings. Discard any needle bearing that was pressed from a parent member during disassembly of the Starter. Remove and discard any other needle bearing that appears worn, distorted, has loose needles or does not run freely.
4. Check all ball bearings. These should run freely without any rough spots or binding. Discard any bearing that gives any indication of wear.

Assembly

General Instructions

1. Always press on the inner ring of a ball-type bearing when installing the bearing on a shaft.
2. Always press on the outer ring of a ball-type bearing when pressing the bearing into a bearing recess.
3. Whenever grasping a starter or part in a vise, always use leather-covered or copper-covered vise jaws. Take extra care with threaded parts, shafts or housings.
4. Except for bearings, always clean every part and wipe every part with a thin film of oil before installation.
5. Check every bearing for roughness. If an open bearing must be cleaned, wash it thoroughly in a suitable cleaning solution and dry with a clean cloth. Sealed or shielded bearings should never be cleaned. Work grease thoroughly into every open bearing before installation.
6. Apply a film of O-ring lubricant to all O-rings before final assembly.
7. Unless otherwise noted, always press on the stamped end of a needle bearing when installing the needle bearing in a recess, using a piloted arbor. The use of a flat arbor, or installing the bearing wrong end first, may fracture the shell or lock the needles against rotation.

Assembly of Drive Gear

If the Drive Shaft Grease Seal (34) was removed from the Gear Case Cover (33), press in a new Seal so that the inner lips of the Seal face the bearing recess for the Drive Shaft Front Bearing (31).

2. Apply a thin film of moly-base grease to the Drive Shaft (36) and the bore of the Drive Shaft Front Bearing and Drive Shaft Collar (35).
3. Press the Drive Shaft Collar, beveled end first, onto the keyway end of the Drive Shaft until it sets against the shoulder of the splines.
4. Press the Drive Shaft Front Bearing onto the keyway end of the Drive Shaft until it seats against the Drive Shaft Collar.
5. Install the Drive Gear Key (37) in the keyway on the Drive Shaft.
6. Press the Drive Gear (30), long hub first, on the Drive Shaft until it contacts the Drive Shaft Front Bearing.

Assembly of the Gear Case

1. Set the Gear Case (24) flat on a table with the Drive Housing side, the side with the twelve (12) hole pattern, facing upward.
2. Place the Bearing Ejecting Washer (27) in the bearing recess.
3. Press the Drive Shaft Rear Bearing (28), unstamped end first, into the bearing recess until the trailing face of the Bearing is flush with the face of the bearing recess. Work some **Ingersoll Rand** Bearing Grease No. 130 between the rollers of the bearing.
4. Wipe a thin film of grease on the Drive Gear Thrust Washer (29), and place the Washer on the lip of the bearing recess in the Gear Case.
5. Apply about 0.24 kg (8 oz.) of **Ingersoll Rand** No. 130 Grease to the assembled Drive Gear (30) and Drive Shaft (36), making certain to work the grease between all the gear teeth, splines, and bearing surfaces.
6. Insert the assembled Drive Gear and Shaft, short hub end first, into the Gear Case so that the short hub enters the Drive Shaft Rear Bearing.
7. Slide the assembled Gear Case Cover, bearing recess first, down over the Drive Shaft until it seats against the Gear Case.

Important: Check the inner lip of the Drive Shaft Grease Seal to make certain that it did not fold outward toward the end of the Drive Shaft. If it did fold outward, you must reinstall the Gear Case Cover, using a fine pointed instrument to roll the lip of the Seal in the proper direction.

Assembly of the Drive Housing

1. If the Drive Housing Bearing (40) was removed, stand the Drive Housing (39) upright and press a new Drive Housing Bearing, unstamped end first, into the Drive Housing until the unstamped end of the Bearing is flush with the inside face of the Drive Housing boss. Work some **Ingersoll Rand** No. 130 Grease in the Bearing.

Do not clean the Starter Drive (38) with solvent. If Starter Drive appears dry, apply Ingersoll Rand No. 130 Grease to the threads under the pinion.

2. Apply a thin film of **Ingersoll Rand** No. 130 Grease to the surface of the Drive Shaft (36).
3. Place the Starter Drive on the Drive Shaft.
4. Place the Drive Housing over the Drive onto the Gear Case Cover (33). Rotate the Drive Housing into the required orientation as indicated by the punch marks. At the same time, align the Cap Screw holes in the Gear Case, Cover and Housing.
5. Install the Drive Housing Cap Screws (42) and Lock Washers (41) and tighten the Cap Screws to 100 in-lb (13 Nm) of torque.

Assembly of the Intermediate Gear Case

1. Position the assembled Drive Housing and Gear Case on a table, or fixture, so that the open end of the gear case is oriented up, and the pinion is down.
2. Lubricate the Gear Case O-ring (26) with a thin film of O-ring lubricant and position it in the groove in the bearing bore of the Gear Case.
3. If required, press the Gear Frame Bearings (21, 16) onto the Gear Frame (15). The rear bearing (16) is usually pressed on first. Take care to press on the INNER race of these bearings when pressing them on to the shaft.
4. Place the Offset Gear Pinion (22) onto the shaft of the Gear Frame Assembly (15).

5. Install the Pinion Retaining Ring (23) in the groove on the pinion shaft taking care not to over expand the ring while placing it on the shaft. Make sure the Pinion Retaining Ring is fully seated in the groove before moving on to the next step.
6. Position the Gear Frame Assembly (15) by locating the outer race of the small bearing in the bearing seat in the Offset Gear Case (24). Care must be taken not to damage the O-ring in the Offset Gear Case during this operation.
7. Lubricate the O-rings for the Intermediate Gear Case (11) with O-ring Lubricant and install on the Intermediate Gear Case.
8. Set the Intermediate Gear Case on the Offset Gear Case making certain the punch marks on both Gear Cases are aligned.
9. Install the Drain Plugs (14) in the Intermediate Gear Case.
10. Fill the Intermediate Gear Case, through the exposed open end, with 55 ml (1.9 fl. oz.) of 80W90 gear oil. Do not overfill.

Assembly of Motor Housing

1. Before installing the Motor Assembly (8), coat the Orings on the Motor Assembly and the inside of the Motor Housing bore with O-ring lubricant. Position the Motor Housing with the main bore opening in the vertical position. Carefully slide the Motor Assembly down into the housing, with the geared shaft pointing out. It is important to slide the motor assembly in as straight as possibly to prevent a cut O-ring. When properly seated in the motor housing the front exhaust passage, in the housing, should be completely visible.
2. Set the Motor Housing assembly on the assembled Offset Gear Case and Drive Housing assembly, making certain the punch marks on the Intermediate Gear Case are aligned with those on the Motor Housing Assembly.
3. Fill the fluid reservoir at the back of the Motor Housing with 7 ml (0.24 fl.oz.) of 80W90 hypoid gear oil. Do not overfill. Wrap the filler Plug with Teflon tape and install in the Motor Housing. Tighten to 5 to 10 ftlb (6.8 to 13.6 Nm) of torque.
4. Wipe/clean the gasket surface on the rear of the Motor Housing. Position the Motor Inlet Cover Gasket (5) on the Motor Housing.
5. Set Inlet Cover (3) onto the Motor Housing making certain the punch marks on the Inlet Cover align with those on the Motor Housing. Take care not to disturb the alignment of the Inlet Cover Gasket when positioning the Inlet Cover.
6. Install the Motor Housing/Inlet Cover Cap Screws (1) and Lock washers (2). Tighten the Cap Screws to 25 ftlbs (34 Nm) of torque.

Test and Inspection Procedure

1. **Clutch Ratcheting:** Turn the Drive Pinion (38) by hand in the direction of Starter Rotation. The Pinion should advance smoothly and easily to the stop.
2. **Motor and Gearing Freeness:** Turn the Drive Pinion (38) opposite the direction of Starter rotation. The Drive Pinion should turn by hand.
3. **Motor Action:** Attach an air hose to the inlet and operate the motor slowly to see that it functions properly and that the Drive Pinion rotates in the proper direction. If the direction of rotation is incorrect, the motor was improperly assembled.
4. **Pinion Orientation:** The chamfers on the pinion teeth should be on the following side of the teeth.
5. **Leak Inspection:** Plug the exhaust. Connect air line to the inlet, regulate the air pressure to 40 psig (2.8 bar/ 280 kPa) and immerse the unit for 30 seconds in light oil, or non-flammable solvent. If there are any bubbles, the unit is unfit for gas operation. Tighten where necessary and/or apply sealant to area showing leak. Retest.

Parts and Maintenance

NOTICE

The use of other than genuine Ingersoll Rand replacement parts may result in safety hazards, decreased motor performance, and increased maintenance, and may invalidate all warranties. Ingersoll Rand is not responsible for customer modification of motors for applications on which Ingersoll Rand was not consulted.

Repairs should be made only by authorized trained personnel. Consult your nearest Ingersoll Rand Authorized Service center.

When the life of the motor has expired, it is recommended that the motor be disassembled, degreased and parts be separated by material so that they can be recycled.

Manuals can be downloaded from www.irtools.com.
Refer all communications to the nearest **Ingersoll Rand** Office or Distributor.

Notes:

www.irtools.com

© 2009 ***Ingersoll Rand*** *Company*

Ingersoll Rand