RESERVDELSINFORMATION / PARTS INFORMATION

1712 Parts List

Ingersoll Rand 1712B2

Originaldokument: Ingersoll Rand

Tillhandahålls av Professional Technologies Sweden AB

Original document by Ingersoll Rand, provided by
Professional Technologies Sweden AB - authorized Ingersoll Rand distributor.

Produkt / Product: skanna QR-koden · scan QR

Service · Kalibrering · Originalreservdelar

Service · Calibration · Genuine spare parts

protech.nu

protech@protech.nu · +46 303-891 35

Munkerödsvägen 5, 444 32 Stenungsund, Sverige · Org.nr 556684-8270

Ingersoll Rand och logotypen är varumärken som tillhör Ingersoll Rand Inc. Ingersoll Rand and the logo are trademarks of Ingersoll Rand Inc.

03531753
Edition 14
August 2012

Air Impact Wrench

Models 1712B2 and 1712P2

Parts Information

Save These Instructions

Ingersoll Rand®

Model 1712B2 Air Impact Wrench - Exploded View

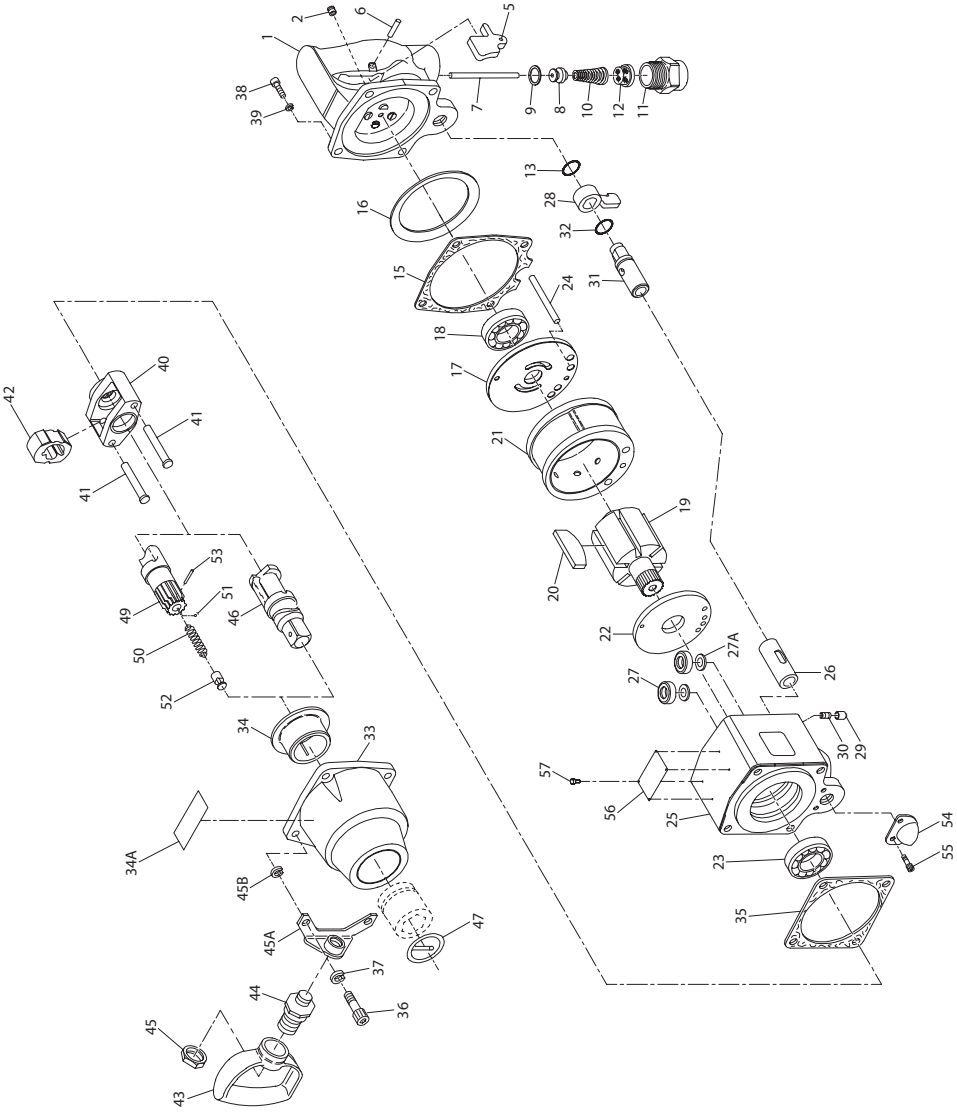

(Dwg. TPB516-7)

Model 1712B2 Air Impact Wrench - Parts List

Item	Part Description	Part Number
1	Inside Trigger Handle Assembly	1712-A92
2	Grease Fitting	130SR-188
5	Inside Trigger	834-93A
• 6	Inside Trigger Pin	534-265
7	Throttle Valve Plunger	2934-302
8	Throttle Valve Assembly	2934-A50
† • 9	Throttle Valve Face	2934-159
† • 10	Throttle Valve Spring	834-51
11	Straight Inlet	845-565
† 12	Air Strainer Screen	434-61
† • 13	Reverse Valve Seal	R00BR-210
† • 15	Handle Gasket	2934-283
16	Motor Clamp Washer	2934-207
17	Rear End Plate	2934-12
† 18	Rear Rotor Bearing	508-97
19	Rotor	2934-53
† • 20	Vane Packet (set of 6 Vanes)	2934-42-6
21	Cylinder	2934-3
22	Front End Plate	2934-11
† 23	Front Rotor Bearing	810-97
24	Cylinder Dowel	2934-98
25	Motor Housing Asssembly	1712-A40
26	Reverse Valve Bushing	2934-330S
† • 27	Air Port Gasket (2)	R44H-210A
† • 27A	Air Port Gasket Retainer (2)	2940-200
28	Reverse Lever	2934-658A
† • 29	Reverse Lock Plunger	4U-663B
† • 30	Reverse Lock Plunger Spring	4U-664
31	Reverse Valve Assembly	2934-A329
† • 32	Valve Seal	85H-167
33	Hammer Case Assembly	1712B-A727
34	Hammer Case Bushing	2934-641
34A	Warning Label	WARNING-2-99
† 35	Hammer Case Gasket	2934-36
36	Hammer Case Cap Screw (4)	834-638
37	Hammer Case Cap Screw Lock Washer (4)	34U-58
38	Handle Cap Screw (4)	510-638
39	Cap Screw Lock Washer (4)	8U-58
40	Hammer Frame Assembly	2934-A703
41	Hammer Pin (2)	2934-704
42	Hammer	1712-724

Item	Part Description	Part Number
*	Dead Handle	834-48
43	Side Spade Handle	T15-41
44	Side Spade Handle Stud	534-148
45	Side Spade Handle Stud Nut	107-73A
45A	Side Spade Handle Bracket	2934-364
45B	Side Spade Handle Bracket Spacer (2)	2934-140
46	1" Square Drive Anvil	
	Standard Length	1712-726
	6" Extended Length	280-726-6
• 47	Retainer Ring (for 1" Square Drive Anvil)	RR10015S
49	Spline Drive Anvil	
	Standard Length	1712-A526
	6" Extended Length	280-A514-6
50	Retaining Plunger Spring	2940-231
51	Socket Retaining Ball	D04-280
52	Retaining Ball Plunger	845-230
53	Plunger Retaining Pin	845-128
54	Exhaust Deflector	280-167
55	Exhaust Deflector Screw (2)	W54-376
56	Nameplate	1712-301
57	Nameplate Screw (4)	C32-302
*	Exhaust Deflector Kit	2934-K23
*	Exhaust Baffle	2934-124
*	Gasket	2934-223
*	Silencer	2940P-311
*	Screw (2)	R43F-104
*	Piped-Away Exhaust Kit	
	without Muffler	2940-K184
*	Exhaust Adapter	294-167
*	Exhaust Adapter Gasket	2940-30
*	Adapter Cap Screw (2)	AL-638
*	Exhaust Hose	R21-230
*	Hose Clamp	R21-31
*	Horizontal Hanger	2934-366
*	Tune-up Kit (includes illustrated parts 3, 9, 10, 12, 13, 15, 18, 20, 23, 27 (2), 27A (2), 29, 30, 32 and 35)	1712B/1712P-TK3

* Not Illustrated.
† Indicates Tune-up Kit Part.
• To keep downtime to a minimum it is desirable to have on hand certain repair parts. We recommend that you stock one (pair or set) of each Part indicated by a bullet (•)for every four tools in service.

Model 1712P2 Air Impact Wrench - Exploded View

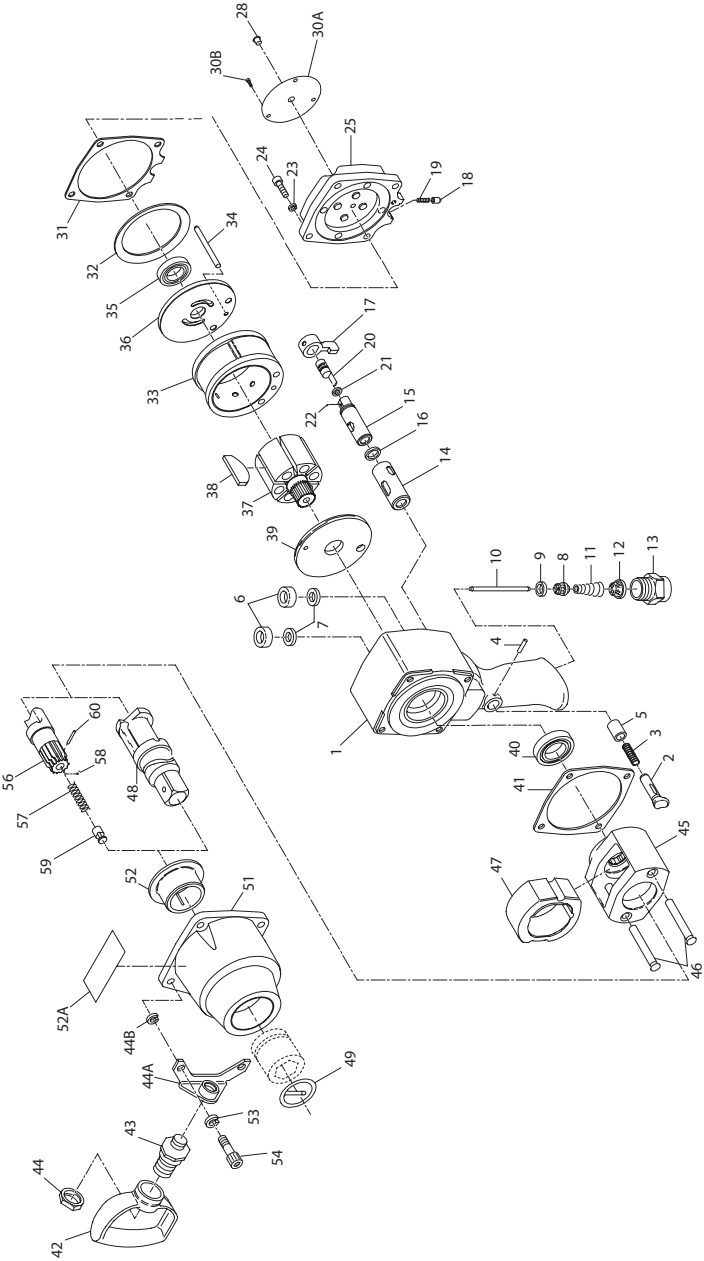

(Dwg. TPA873–3)

Model 1712P2 Air Impact Wrench - Parts List

Item	Part Description	Part Number	Item	Part Description	Part Number
1	Motor Housing Assembly	1712P-A40	† 40	Front Rotor Bearing	810-97
2	Trigger	2934P-93	† • 41	Hammer Case Gasket	2934-36
3	Trigger Spring	2934P-51	*	Dead Handle	834-48
5	Trigger Bushing	2905-91S	42	Side Spade Handle	T15-41
† • 6	Air Port Gasket (2)	R44H-210A	43	Side Spade Handle Stud	534-448
† • 7	Gasket Retainer (2)	2940-200	44	Side Spade Handle Nut	107-73A
8	Throttle Valve	2934P-A50	44A	Side Spade Handle Bracket	2934-364
† • 9	Throttle Valve Face	2934-159	44B	Side Spade Handle Bracket Spacer (2)	2934-140
10	Throttle Valve Plunger	2934P-302	45	Hammer Frame Assembly	2934-A703
† • 11	Throttle Valve Spring	834-51	46	Hammer Pin (2)	2934-704
† 12	Air Strainer Screen	434-61	47	Hammer	1712-724
13	Straight Inlet	845-565	48	1" Square Drive Anvil	
14	Reverse Valve Bushing	2934P-330S		Standard Length	1712-726
15	Reverse Valve Assembly	2934P-A329		6" Extended Length	280-726-6
† • 16	Reverse Valve Seal	85H-167	• 49	Retainer Ring (for 1" Square Drive Anvil)	RR10015S
17	Reverse Lever	2934-658A	51	Hammer Case Assembly	1712-A727
† • 18	Reverse Lock Plunger	4U-663B	52	Hammer Case Bushing	2934-641
† 19	Reverse Lock Spring	4U-664	52A	Warning Label	WARNING-2-99
20	Power Regulator Assembly	2934P-A249	53	Cap Screw Lock Washer (4)	34U-58
† 21	Power Regulator Seal	R1A-159	54	Hammer Case Cap Screw (4)	834-638
22	Power Regulator Retaining Ball	AV1-255	*	Muffler	2910-674
23	Housing Cover Lock Washer (4)	8U-58	56	Spline Drive Anvil	
24	Housing Cover Cap Screw (4)	510-638		Standard Length	1712-A526
25	Housing Cover Assembly	1712P-A102		6" Extended Length	280-A514-6
28	Grease Fitting	130SR-188	57	Retaining Plunger Spring	2940-231
30A	Nameplate	1712P-301	58	Socket Retaining Ball	D04-280
† 30B	Nameplate Screws (3)	C32-302	59	Retaining Ball Plunger	845-230
† 31	Housing Cover Gasket	2934-283	60	Plunger Retaining Pin	845-128
32	Motor Clamp Washer	2934-207	*	Horizontal Hanger	2934-366
33	Cylinder	2934-3	*	Tune-up Kit (includes illustrated parts 3, 6 [2], 7 [2], 9, 11, 12, 16, 18, 19, 21, 27, 30, 31, 35, 38, 40 and 41)	1712B/1712P-TK3
34	Cylinder Dowel	2934-98			
† 35	Rear Rotor Bearing	508-97			
36	Rear End Plate	2934-12			
37	Rotor	2934-53			
† • 38	Vane Packet (set of 6 Vanes)	2934-42-6			
39	Front End Plate	2934-11			

* Not Illustrated.
† Indicates Tune-up Kit Part.
• To keep downtime to a minimum it is desirable to have on hand certain repair parts. We recommend that you stock one (pair or set) of each Part indicated by a bullet (•)for every four tools in service.

Parts and Maintenance

When the life of the tool has expired, it is recommended that the tool be disassembled, degreased and parts be separated by material so that they can be recycled.

Tool repair and maintenance should only be carried out by an authorized Service Center.

Refer all communications to the nearest **Ingersoll Rand** Office or Distributor.

Related Documentation

For additional information refer to:
Air Impact Wrench Product Safety Information Manual 04580916.
Air Impact Wrench Product Information Manual 16581977.

Manuals can be downloaded from www.ingersollrandproducts.com.

Notes:

Notes:

www.ingersollrandproducts.com

© 2012 Ingersoll-Rand, plc

Ingersoll Rand®