RESERVDELSINFORMATION / PARTS INFORMATION

231C Parts List

Ingersoll Rand 231C

Originaldokument: Ingersoll Rand

Tillhandahålls av Professional Technologies Sweden AB

Original document by Ingersoll Rand, provided by
Professional Technologies Sweden AB - authorized Ingersoll Rand distributor.

Produkt / Product: skanna QR-koden · scan QR

Service · Kalibrering · Originalreservdelar

Service · Calibration · Genuine spare parts

protech.nu

protech@protech.nu · +46 303-891 35

Munkerödsvägen 5, 444 32 Stenungsund, Sverige · Org.nr 556684-8270

Ingersoll Rand och logotypen är varumärken som tillhör Ingersoll Rand Inc. Ingersoll Rand and the logo are trademarks of Ingersoll Rand Inc.

231C Air Impact Wrench - Exploded View

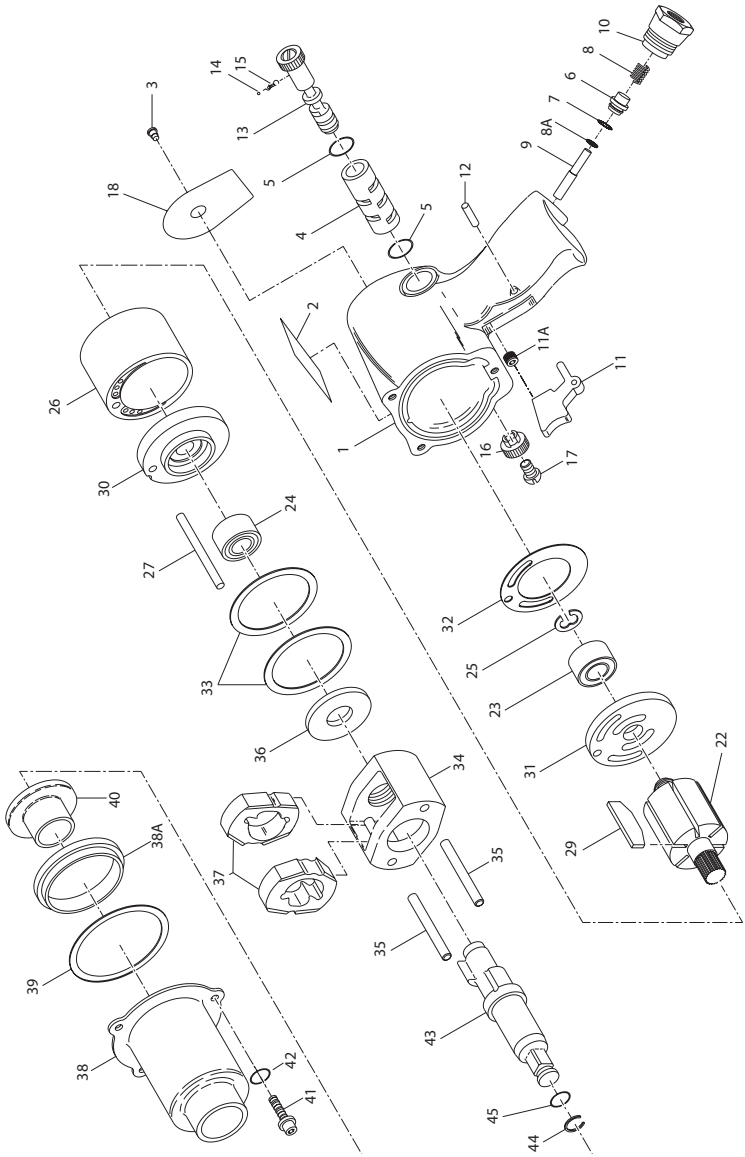

(Dwg. TPA567-11)

231C Air Impact Wrench - Parts List

Item	Part Description	Part Number	Item	Part Description	Part Number
1	Motor Housing	231C-A40	29	Vane Packet (Set of 6 Vanes)	2131-42A-6
2	Warning Label	WARNING-2-99	30	Front End Plate	131-11
3	Grease Fitting	131-188	31	Rear End Plate	131-12
4	Reverse Valve Bushing Assembly	231-A330	32	End Plate Gasket	PF800-283
5	Reverse Valve Bushing Seal (2)	PS3-67	33	Motor Clamp Washer (2)	227-207
6	Throttle Valve Assembly	404-50A	34	Hammer Frame Assembly	231XP-A703
7	Throttle Valve Face	405-159	35	Hammer Pin (2)	231-704
8	Throttle Valve Spring	R1A-51	36	Hammer Frame Rear Washer	231-706
8A	Throttle Valve Seat	402-303	37	Hammer (2)	231XP-724
9	Throttle Valve Stem	402-302	38	Hammer Case Assembly	131-A927
10	Air Strainer Assembly	402-565	38A	Hammer Case Pilot	405-800
11	Trigger	705-93	39	Hammer Case Gasket	230-36
11A	Plug	502-95	40	Hammer Case Bushing	705-941
12	Trigger Pin	533-656	41	Hammer Case Cap Screw (3)	131-638
13	Reverse Valve	231-329A	42	Hammer Case Lock Washer (3)	131-637
14	Reverse Valve Detent Ball	AV1-255	43	Anvil Assembly	231B-A626
15	Reverse Valve Detent Spring	131-664	44	Socket Retainer	2135-425
16	Reverse Valve Knob	131-666	45	Retainer O-Ring	R1A-159
17	Reverse Valve Knob Screw	231-665	*	Plastic Boot	231-P32
18	Nameplate	231C-301	*	Tune-Up Kit (includes illustrated parts	
22	Rotor	231-53		5(2), 7, 8, 14, 15, 23, 24, 25, 29, 32, 44,	231-TK3
23	Rear Rotor Bearing	402-22		45 and non-illustrated part R1-75).	
24	Front Rotor Bearing	4U-97	*	Hammer Kit (includes illustrated parts	
25	Rear Rotor Bearing Retainer	131-118		24, 37(2), 39, 41(3), 42(3) and 43)	
26	Cylinder	131-3		For 231 (Standard Length)	231B-THK1
27	Cylinder Dowel	230-98		For 231-2 (2" Extended Length)	231B-THK2

* Not Illustrated.

Parts and Maintenance

When the life of the tool has expired, it is recommended that the tool be disassembled, degreased and parts be separated by material so that they can be recycled.

Tool repair and maintenance should only be carried out by an authorized Service Center.

Refer all communications to the nearest **Ingersoll Rand** Office or Distributor.

Related Documentation

For additional information refer to:
Air Impact Wrench Product Safety Information Manual 04580916.
Air Impact Wrench Product Information Manual 04584819.

Manuals can be downloaded from www.ingersollrandproducts.com

© 2011 **Ingersoll Rand**
04584546
Edition 3
June 2011