RESERVDELSINFORMATION / PARTS INFORMATION

# 324 Parts Information

Ingersoll Rand 324-1 · 324

**Originaldokument: Ingersoll Rand**

Tillhandahålls av Professional Technologies Sweden AB

Original document by Ingersoll Rand, provided by
Professional Technologies Sweden AB - authorized Ingersoll Rand distributor.

**Produkt / Product: skanna QR-koden · scan QR**

**Service · Kalibrering · Originalreservdelar**

Service · Calibration · Genuine spare parts

**protech.nu**

protech@protech.nu · +46 303-891 35

Munkerödsvägen 5, 444 32 Stenungsund, Sverige · Org.nr 556684-8270

Ingersoll Rand och logotypen är varumärken som tillhör Ingersoll Rand Inc. Ingersoll Rand and the logo are trademarks of Ingersoll Rand Inc.

## 324 Series Pinstripe Remover - Exploded View

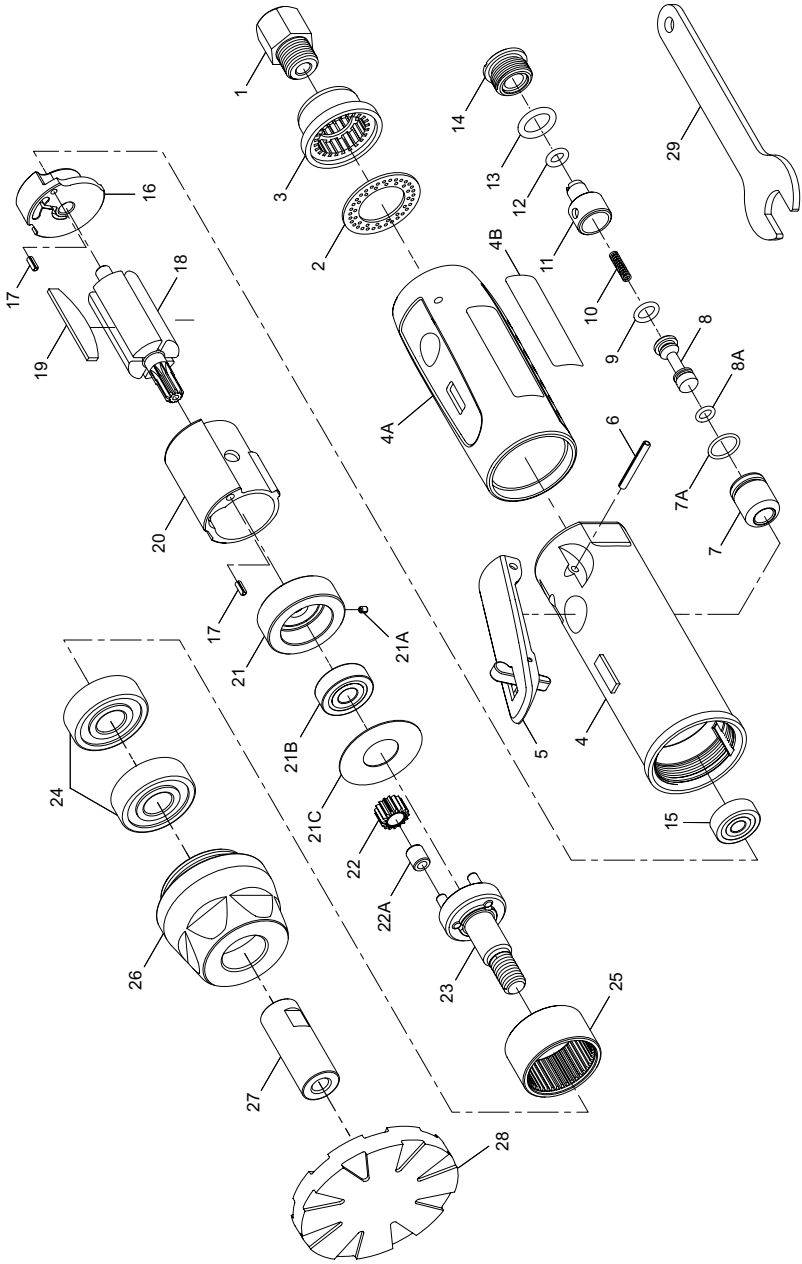


(Dwg. 47509197001)

## 324 Series Pinstripe Remover - Parts List

| Item | Description | Part Number | (CCN) |
|---|---|---|---|
| 1 | Inlet Bushing | 324-565 | (47509797001) |
| 2 | Exhaust Washer | 324-246 | (47509798001) |
| 3 | Exhaust Deflector | 324-23 | (47509799001) |
| 4 | Motor Housing | 324-40 | (47509800001) |
| 4A | Housing Sleeve | 324-747 | (47509801001) |
| 4B | Model Label | 324-301 | (47515713001) |
| 5 | Safety Lever | 324-273 | (47509802001) |
| 6 | Pin | 324-120 | (47509228001) |
| 7 | Valve | 324-526 | (47509804001) |
| 7A | O-ring | 324-65 | (47509805001) |
| 8 | Throttle Valve | 324-302 | (47509806001) |
| 8A | O-ring | 324-282 | (47509807001) |
| 9 | O-ring | 324-367 | (47509808001) |
| 10 | Spring | 324-250 | (47509809001) |
| 11 | Air Regulator | 324-165 | (47509810001) |
| 12 | O-ring | 324-367-A | (47509811001) |
| 13 | O-ring | 324-367-B | (47509812001) |
| 14 | Valve Screw | 324-69 | (47509813001) |
| 15 | Ball Bearing | 324-22 | (47509814001) |
| 16 | Rear Plate | 324-12 | (47509815001) |

| Item | Description | Part Number | (CCN) |
|---|---|---|---|
| 17 | Pin | 324-120-A | (47509816001) |
| 18 | Rotor | 324-53 | (47509817001) |
| 19 | Rotor Blade | 324-257 | (47509818001) |
| 20 | Cylinder(Steel) | 324-3 | (47509819001) |
| 21 | Front End Plate | 324-11 | (47509820001) |
| 21A | Pin | 324-553 | (47509821001) |
| 21B | Ball Bearing | 324-24 | (47509823001) |
| 21C | Washer | 324-247 | (47509822001) |
| 22 | Idler Gear | 324-82 | (47509824001) |
| 22A | Bushing | 324-330 | (47509825001) |
| 23 | Idler Gear Plate | 324-216 | (47509826001) |
| 24 | Ball Bearing | 324-97 | (47509827001) |
| 25 | Ring Gear | 324-406 | (47509828001) |
| 26 | Gear Cap | 324-624 | (47509829001) |
| 27 | Spindle | 324-108 | (47509830001) |
| 28 | Eraser Wheel Pad (Quantity 1) | 324-700-1 | (47515724001) |
| | Eraser Wheel Pad (Quantity 6) | 324-700-6 | (47515702001) |
| 29 | Wrench | 324-26 | (47509831001) |

## Parts and Maintenance

When tool life has expired, it is recommended that the tool be disassembled, degreased and parts separated by material for proper recycling.

Tool repair and maintenance should only be carried out by an authorized Service Center.

Refer all communications to the nearest **Ingersoll Rand** office or distributor.

## Related Documentation

Manuals can be downloaded from ingersollrandproducts.com

For additional information, refer to:
Product Safety Information Manual 04580288.
Product Information Manual 47509840001.


© ***2015 Ingersoll Rand***
**47509803001**
Edition 1
June 2015