RESERVDELSINFORMATION / PARTS INFORMATION

33-serie - Reservdelslista

Ingersoll Rand 33SKA

Originaldokument: Ingersoll Rand

Tillhandahålls av Professional Technologies Sweden AB

Original document by Ingersoll Rand, provided by
Professional Technologies Sweden AB - authorized Ingersoll Rand distributor.

Produkt / Product: skanna QR-koden · scan QR

Service · Kalibrering · Originalreservdelar

Service · Calibration · Genuine spare parts

protech.nu

protech@protech.nu · +46 303-891 35

Munkerödsvägen 5, 444 32 Stenungsund, Sverige · Org.nr 556684-8270

Ingersoll Rand och logotypen är varumärken som tillhör Ingersoll Rand Inc. Ingersoll Rand and the logo are trademarks of Ingersoll Rand Inc.

03523008
Edition 17
February 2008

Air Drill

33 Series

Parts Information

Save These Instructions

Ingersoll Rand

33 Series Air Drill Motor Housing, Motor and Throttle Parts - Sectional Diagram

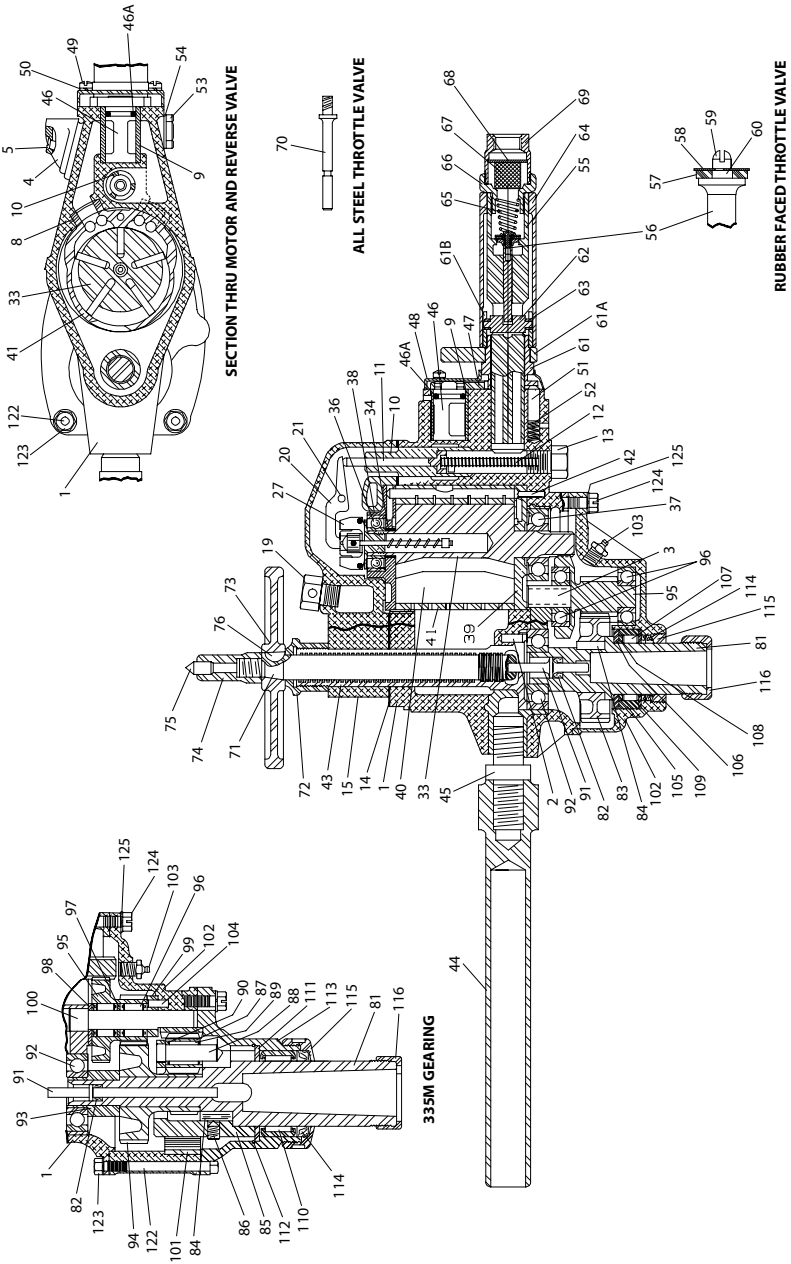

(Dwg. TPA131-6)

33 Series Air Drill Motor Housing, Motor and Throttle Parts- Parts List

Item	Part Description	Part Number
1	Motor Housing	
	for 33SMA	R33SM-40A
	for 33SMA-EU	R33SM-EU-40A
	for 33H, 33J, 33SJ and 33SKA	R33H-40A
	for 33H-EU, 33J-EU, 33SJ-EU and 33SKA-EU	R33H-EU-40A
*	Nameplate	
	for models ending in -EU	R2H-EU-99
	for all other models	R2H-99
*	Warning Label	
	for models ending in -EU	EU-99
	for all other models	WARNING-8-99
2	Feed Screw Dowel	R3H-527
3	Intermediate Gear Bearing Stud (not used on 33SMA or 33SMA-EU)	R3H-502
4	Exhaust Deflector	R33H-23
5	Exhaust Deflector Screw	R33H-312
8	Air Port Gasket (2)	R22H-210
9	Reverse Valve Bushing	534-330
10	Governor Valve Bushing	R3H-429A
*	Muffler Screen	R33H-311
*	Muffler Screen Retainer	R00B1-159
11	Governor Valve	R3H-425A
12	Governor Valve Spring	R3H-431
13	Governor Valve Cap	R3H-433
• 14	Backhead Gasket	R3H-283
15	Backhead	R3H-102A
16	Grease Fitting	23-188
17	Oiler Adjusting Screw (2)	JA4-71
18	Oiler Felt (8)	JA4-75
19	Oil Chamber Plug	P25-227
20	Governor Lever	R4F-436
21	Governor Lever Pin	MP1-15A
22	Backhead Short Cap Screw (4)	R3H-57
23	Backhead Long Cap Screw (2)	R3H-66
24	1/4" Lock Washer (4)	L01-27
24A	Backhead Cap Screw Washer (2) (Copper)	DLC-504B
27	Weight-type Governor Assembly	R3H-A424
33	Rotor	R33H-53B
34	Rotor Bearing Spacer	R3H-65
• 36	Rear Rotor Bearing	R3H-22
• 37	Front Rotor Bearing	R3H-24
• 38	Rear End Plate	R33H-12
• 39	Front End Plate	R33H-11
• 40	Vane Packet (set of 5 vanes)	R3H-42A-5
41	Cylinder	
	for maximum power in counterclockwise rotation (when facing spindle end) (standard for Drill; special for Base-Mounted Motors)	R33H-3A
	for equal power in either direction (standard for Base-Mounted Motors; special for Drills)	R33H51-3
	for maximum power in clockwise rotation (special for Drills and Base Mounted Motors)	R33H-203

Item	Part Description	Part Number
42	Cylinder Dowel	R3H-98A
43	Outer Feed Screw	R3H-290A
44	Dead Handle	TC-48
45	Dead Handle Stud	TC-364
46	Reverse Valve	R33H-A329
• 46A	Reverse Valve Seal	R18LF-21
47	Reverse Valve Sector	TCC-428
48	Sector Cover	TCC-429A
49	Sector Cover Screws (4)	TCC-430
50	Sector Cover Screw Lock Washers (4)	T05-58
51	Stop Pin	TCC-431
52	Stop Pin Spring	B01-11
53	Throttle Body Set Screw	TCCW-433
54	Throttle Body Set Screw Lock Washer	D02-537
	Roll Throttle Assembly	R33H-A518
*	Rotation Label	R22H-100
† 55	Throttle Body	R33H-409
‡ 56	Rubber-Faced Throttle Valve	R4H-402
• 57	Throttle Valve Face	R4H-159
58	Throttle Valve Face Cap	R4H-157
59	Throttle Valve Face Retaining Screw	R4-158
60	Retaining Screw Lock Washer	H54U-352
61	Throttle Sector	R33P5-1487
61A	Reverse Lever	R55H-314
*	Reverse Lever Set Screw (2)	R2J-561
61B	Throttle Cam	R4H-317
62	Throttle Valve Lift Pin	R4H-306
63	Lift Pin Roller (2)	TAA-426
64	Throttle Sleeve	R4H-305
65	Throttle Valve Spring	R33H-418
	Air Strainer Assembly	R4H-A565
66	Air Strainer Cap	R4H-566
67	Air Strainer Screen	R3H-61
68	Air Strainer Screen Support	R3H-567
69	Air Strainer Body	R3H-565
70	All-Steel Throttle Valve	R4H-302
	Feed Screw Assembly	R3H-A291
71	Inner Feed Screw	R3H-291
72	Feed Screw Cap	TC-392
73	Feed Handle	TC-2
74	Feed Handle Lock Nut	TC-388A
75	Feed Screw Center	TC-244
76	Feed Handle Key	TC-18

* Not Illustrated

† If ordered as a replacement for a Throttle Body equipped with an All-Steel Throttle Valve, also order the Rubber-Faced Throttle Valve (56). The All-Steel Valve is discontinued.

‡ Cannot be used as a replacement for the All-Steel Throttle Valve.

• To keep downtime to a minimum, it is desirable to have on hand certain repair parts. We recommend that you stock one (pair or set) of each part indicated by a bullet (•) for every four tools in service.

Gear Case, Gearing and Spindle Parts

Item	Part Description	Part Number
	Spindle Assembly	
	for Model 33H or 33H-EU	R3H-A108
	for Model 33J or 33J-EU	R3J-A108
	for Model 33SJ or 33SJ-EU	R3SJ-A108
	for Model 33SKA or 33SKA-EU	R3SK-A108
	for Model 33SMA or 33SMA-EU	R3SM-B108
81	Spindle	
	for Models 33H or 33H-EU, 33J or 33J-EU	R3H-108
	for Model 33SMA or 33SMA-EU	R3SM-108
	for Models 33SJ or 33SJ-EU, 33SKA or 33SKA-EU	R3SH-108
82	Ejecting Pin Packing	
	for Models 33H, 33H-EU, 33J, 33J-EU, 33SJ, 33SJ-EU, 33SKA or 33SKA-EU	R3H-408
	for Model 33SMA or 33SMA-EU	R3SM-408
83	Spindle Gear	
	for Model 33H or 33H-EU	R33W-9A
	for Models 33J or 33J-EU, 33SJ or 33SJ-EU	R3J-9
	for Model 33SKA or 33SKA-EU	R3SK-9
84	Spindle Gear Key or Planet Gear Frame Key	
	for Models 33H, 33H-EU, 33J, 33J-EU, 33SJ, 33SJ-EU, 33SKA or 33SKA-EU	TB-410
	for Model 33SMA or 33SMA-EU	R3SM-410
	Planet Gear Frame Assembly (for Model 33SMA or 33SMA-EU only)	R3SM-A367
85	Planet Gear Frame	R3SM-367
86	Planet Gear Frame Set Screws (3)	R3SM-574
87	Planet Gear (3)	533-652
88	Planet Gear Shaft (3)	R3SM-191
89	Planet Gear Roller (54)	533-654
90	Roller Retaining Plate (6)	533-655
91	Drill Ejecting Pin	
	for Models 33H, 33H-EU, 33J or 33J-EU	R3H-114
	for Model 33SMA or 33SMA-EU	R3SM-114
	for Models 33SJ, 33SJ-EU, 33SKA or 33SKA-EU	R3SH-114
• 92	Spindle Thrust Bearing	D04-366
93	Spindle Thrust Bearing Spacer (for Model 33SMA or 33SMA-EU)	R3SM-100
94	Spindle Gear	R3SM-9
95	Intermediate Gear	
	for Model 33H or 33H-EU	R33W-82A
	for Models 33J, 33J-EU, 33SJ or 33SJ-EU	R3J-82A
	for Model 33SKA or 33SKA-EU	R3SK-82A
96	Intermediate Gear Bearing	
	for Models 33H, 33H-EU, 33J, 33J-EU, 33SJ, 33SJ-EU, 33SKA or 33SKA-EU	TB-394
	for Model 33SMA or 33SMA-EU	R3SM-501

- To keep downtime to a minimum, it is desirable to have on hand certain repair parts. We recommend that you stock one (pair or set) of each part indicated by a bullet (•) for every four tools in service.

Gear Case, Gearing and Spindle Parts (Contd.)

Item	Part Description	Part Number
97	Intermediate Gear Bearing Spacer (for Model 33SMA or 33SMA-EU)	R3SM-573
98	Intermediate Gear Thrust Washer (for Model 33SMA or 33SMA-EU)	R3SM-498
99	Intermediate Gear Thrust Plate (for Model 33SMA or 33SMA-EU)	R3SM-570
100	Intermediate Gear Shaft (for Model 33SMA or 33SMA-EU)	R3SM-502
101	Internal Gear (for Model 33SMA or 33SMA-EU)	R3SM-406
102	Gear Case	
	for Models 33H, 33H-EU, 33J, 33J-EU, 33SJ, 33SJ-EU, 33SKA or 33SKA-EU	RM3H-37A
	for Model 33SMA or 33SMA-EU	R3SM-37
103	Grease Fitting	23-188
104	Thrust Plate Dowel (for Model 33SMA or 33SMA-EU)	R4-265
105	Spindle Bearing Race (for Models 33H, 33H-EU, 33J, 33J-EU, 33SJ, 33SJ-EU, 33SKA or 33SKA-EU)	R3H-510
106	Spindle Bearing Top Plate (for Models 33H, 33H-EU, 33J, 33J-EU, 33SJ, 33SJ-EU, 33SKA or 33SKA-EU)	R3H-511
107	Spindle Bearing Roller (16) (for Models 33H, 33H-EU, 33J, 33J-EU, 33SJ, 33SJ-EU, 33SKA or 33SKA-EU)	R3H-512
108	Spindle Bearing Cage (for Models 33H, 33H-EU, 33J, 33J-EU, 33SJ, 33SJ-EU, 33SKA or 33SKA-EU)	R3H-513
109	Spindle Bearing Bottom Plate (for Models 33H, 33H-EU, 33J, 33J-EU, 33SJ, 33SJ-EU, 33SKA or 33SKA-EU)	R3H-514
110	Spindle Bearing (for Model 33SMA or 33SMA-EU)	R3H4-510
111	Spindle Thrust Ring (for Model 33SMA or 33SMA-EU)	R4H-511
112	Thrust Ring Retainer (for Model 33SMA or 33SMA-EU)	R3SM-83
113	Gear Case Cover (for Model 33SMA or 33SMA-EU)	R3SM-378
114	Spindle Packing	
	for Models 33H, 33H-EU, 33J, 33J-EU, 33SJ, 33SJ-EU, 33SKA or 33SKA-EU	R3H-14
	for Model 33SMA or 33SMA-EU	R3H4-14
115	Spindle Packing Nut	
	for Models 33H, 33H-EU, 33J, 33J-EU, 33SJ, 33SJ-EU, 33SKA or 33SKA-EU	R3H-15
	for Model 33SMA or 33SMA-EU	R3H4-15
116	Protection Nut	T02-43A
122	Gear Case Bolt (3)	
	for Models 33H, 33H-EU, 33J, 33J-EU, 33SJ, 33SJ-EU, 33SKA or 33SKA-EU	R3H-103
	for Model 33SMA or 33SMA-EU	R3SM-103
123	Gear Case Bolt Nut (1 for each bolt)	T06-139
124	Gear Case Cap Screw (3)	R3H-68A
*	Gear Case Long Cap Screw (for Model 33SMA or 33SMA-EU)	R3SM-126
125	1/4" Lock Washer (7 for 33SMA or 33SMA-EU; 6 for others)	L01-67

* Not Illustrated

Use-Em-Up Spindles and Extension Spindles

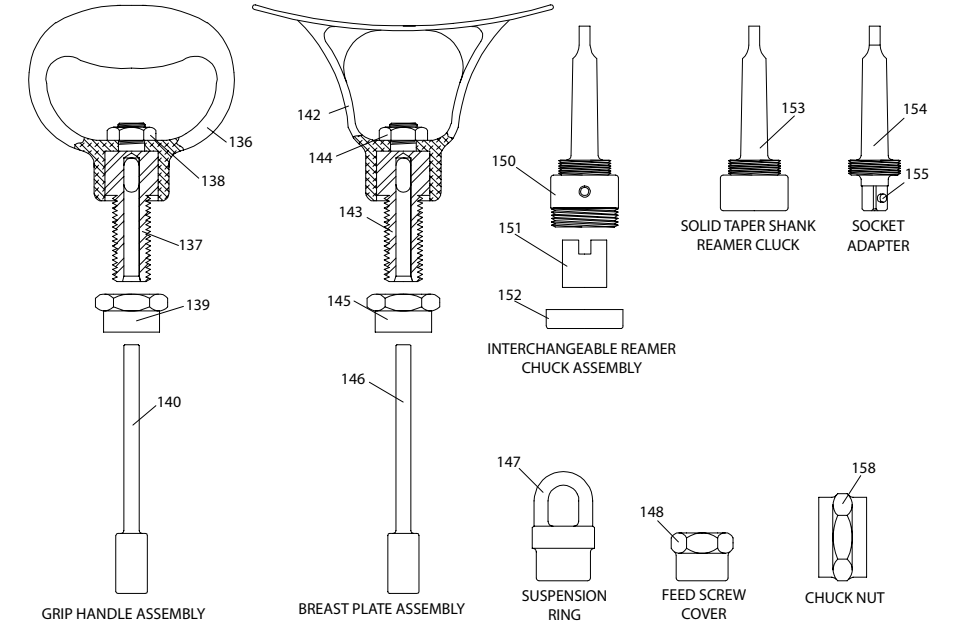

(Dwg. TPA1366-1)

Order a Use-Em-Up Spindle or Extension Spindle by the part number shown in the table below. With the exception of the Spindle, the same parts are included in a Use-Em-Up Spindle Assembly or an Extension Spindle Assembly as in a standard Spindle Assembly.

The following table also lists the Use-Em-Up Ejecting Pins that must be used with the Use-Em-Up Spindles.

Extension Spindles are available for Models 33SJ and 33SKA only.

	33H, 33H-EU	33J, 33J-EU	33SJ, 33SJ-EU	33SKA, 33SKA-EU	33SMA, 33SMA-EU
Use-Em-Up Spindle Assembly	R3H-A294	R3J-A294	R3SJ-A294	R3SK-A294	R3SM-B294
Use-Em-Up Spindle	R3H-294	R3SH-294	R3SH-294	R3SH-294	R3SM-294
Use-Em-Up Ejecting Pin	R3H-395	R3SH-395	R3SH-395	R3SH-395	R3SM-114
Extension Spindle Assembly	---	---	R3SJ-A327	R3SK-A327	---
Extension Spindle	---	---	R3SH-327	R3SH-327	---

Use-Em-Up Spindles and Extension Spindles Parts List

Item	Part Description	Part Number
	Grip Handle Assembly	R33H-A41
136	Grip Handle	TA-41
137	Grip Handle Stud	TC-448
138	Grip Handle Stud Nut	B12-249
139	Grip Handle Nut	TC-447
140	Grip Handle Ejecting Pin	R3H-50
	Breast Plate Assembly	R3H-A79
142	Breast Plate	TC-79
143	Breast Plate Stud	TC-448
144	Breast Plate Stud Nut	B12-249
145	Breast Plate Nut	TC-447
146	Breast Plate Ejecting Pin	R3H-50
147	Suspension Ring	TC-365
148	Feed Screw Cover	TC-461
	Interchangeable Reamer Chuck Assembly (specify size of Bushing required) (for Models 33SJ, 33SJ-EU, 33SKA, 33SKA-EU, 33SMA or 33SMA-EU)	T02-A45A
150	Taper Shank Reamer Chuck for Interchangeable Bushing (for Models 33SJ, 33SJ-EU, 33SKA, 33SKA-EU, 33SMA or 33SMA-EU)	T02-45A
151	Interchangeable Reamer Chuck Assembly (5/8", 11/16", 3/4", 13/16", 7/8", or 1" square drive hole as specified) (for Models 33SJ, 33SJ-EU, 33SKA, 33SKA-EU, 33SMA or 33SMA-EU)	T01-38
152	Interchangeable Reamer Chuck Cap (for Models 33SJ, 33SJ-EU, 33SKA, 33SKA-EU, 33SMA or 33SMA-EU)	T01-54
153	Solid Taper Shank Reamer Chuck (5/8", 3/4", 7/8" or 1" square drive as specified) (for Models 33SJ, 33SJ-EU, 33SKA, 33SKA-EU, 33SMA or 33SMA-EU)	T02-255A
154	Socket Adapter No. 3 Morse Taper, 3/4" Square Drive (for Models 33SJ, 33SJ-EU, 33SKA, 33SKA-EU, 33SMA or 33SMA-EU)	R4J-214
155	Socket Retainer (consists of plunger, spring and washer) (for Models 33H, 33H-EU, 33J or 33J-EU)	504-816
158	Chuck Nut	T12-347
*	Male Hose Nipple	
	3/4" hose to 1/2" male pipe	A03-46
	1/2" hose to 1/2" male pipe	D02-455

* Not Illustrated

Model 33SM54 Drill with Water Attachment for Earth Work

Parts used only in Model 33SM54 Drill with Water Attachment

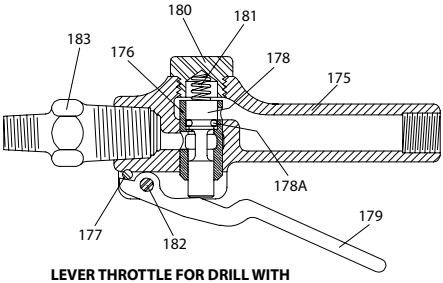

LEVER THROTTLE FOR DRILL WITH WATER ATTACHMENT

(Dwg. TPC117-1)

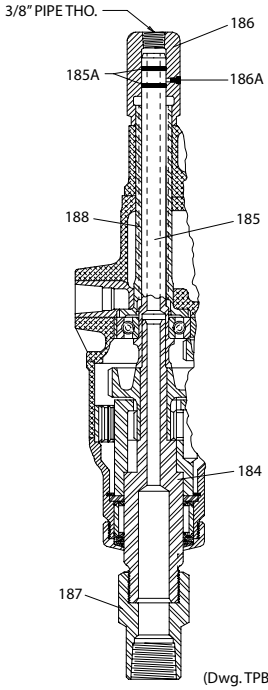

(Dwg. TPB497)

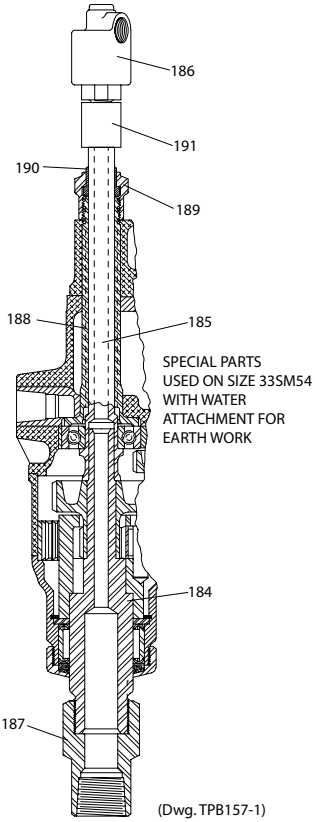

(Dwg. TPB157-1)

Model 33SM54 Drill with Water Attachment for Earth Work

Parts used only in Model 33SM54 Drill with Water Attachment

Item	Part Description	Part Number
	Lever Throttle Assembly	R33SM54-A160
175	Lever Throttle Body	33SR-160
176	Lever Throttle Valve Bushing	33SR-162S
177	Throttle Lever Stop Pin	13SR-265
178	Lever Throttle Valve	33SR-161
178A	Throttle Valve Face	435-159
179	Throttle Lever	33SR-163
180	Lever Throttle Valve Cap	33SR-164
181	Lever Throttle Valve Spring	12SR-262
182	Throttle Lever Pin	13SR-264
183	Lever Throttle Connector	TCC-334
184	Water Attachment Spindle	R33SM54-708
185	Spindle Water Tube	
	Old Style	R33SM54-709
	New Style	R33SM54-A809
‡ 185A	Water Tube Seal (2)	410-283
186	Swivel Joint	
	Old Style	R44L54-712
	New Style	R33SM54-A812
‡ 186A	Grease Fitting	D0F9-879
187	Auger Adapter (1″ pipe tap)	R33SM54-713-1
188	Water Tube Sleeve	R33SM54-790
189	Water Tube Sleeve Cap	R33SM54-792
190	Cap Bushing	R33SM54-793
191	Coupling	R44L54-115
*	Stop Cock	N16-12

* Not Illustrated
‡ Used only on New Style Water Attachment.

NOTICE

The new style Spindle Water Tube (185) and Swivel Joint (186) can be used in combination to replace the old style Spindle Water Tube and Swivel Joint. However, one new style part cannot be used in conjuction with the other old style part.

33 Series Air Drill Base-Mounted Multi-Vane Motors - Exploded Diagram

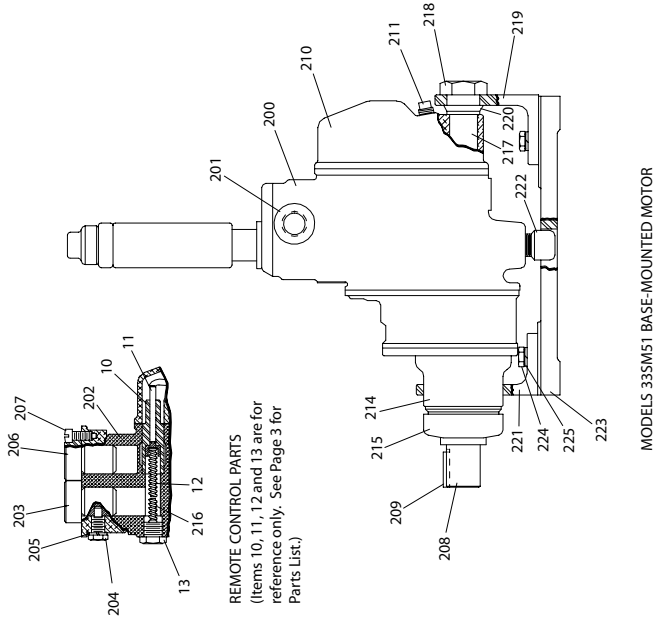

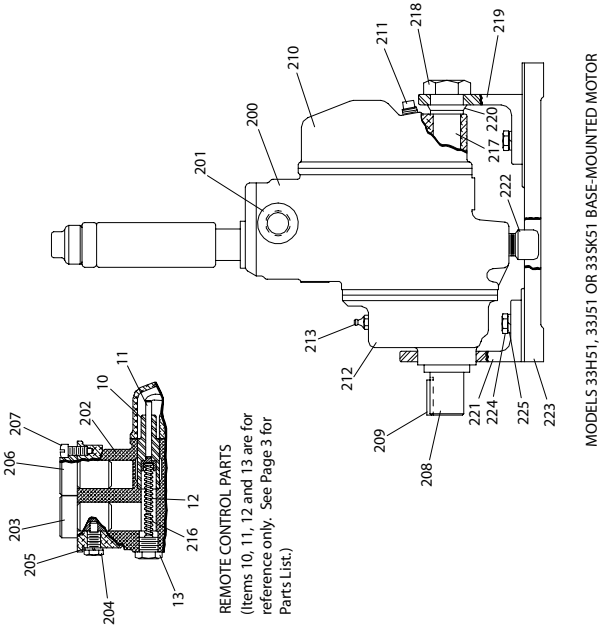

(Dwg. TPD158)

Base-Mounted Multi-Vane Motors

Ingersoll Rand Base-Mounted Multi-Vane Motors, Models 33H51, 33H51-EU, 33J51, 33J51-EU, 33SK51, 33SK51-EU, 33SM51 and 33SM51-EU are essentially Models 33H, 33H-EU, 33J, 33J-EU, 33SKA, 33SKA-EU, 33SMA and 33SMA-EU Multi-Vane Drills with certain parts omitted for mounting purposes and with Spindles changed to round, keyed shafts. Parts used only Base- Mounted Motors are illustrated in the accompanying view. The balance of parts is illustrated in the sectional view of Drills titled **"H", "J"** or **"K" Gearing**.

Parts not included in the following list for Base-Mounted Motors are the same as corresponding parts of Drills. Order them by the part names and part numbers stated for Drills in the part list titled **"MOTOR HOUSING, MOTOR AND THROTTLE PARTS"**.

Item	Part Description	Models 33H51, 33H51-EU 33J51, 33J51-EU 33SK51, 33SK51-EU	Model 33SM51, 33SM51-EU
200	Motor Housing for Roll Throttle (also illustrated parts 2, 8(2), 9 and 10; illustrated part 3 also included for Models 33H51, 33H51-EU, 33J51, 33J51-EU, 33SK51 and 33SK51-EU)		
	for Models ending in -EU	R33H51-EU-40	R33SM51-EU-40
	for all other Models	R33H51-40	R33SM51-40
*	Nameplate		
	for Models ending in -EU	R2H-EU-99	R2H-EU-99
	for all other Models	R2H-99	R2H-99
*	Warning Label		
	for Models ending in -EU	EU-99	EU-99
	for all other Models	WARNING-10-99	WARNING-10-99
201	Exhaust Bushing	R33H51-439	R33H51-439
202	Motor Housing for Remote Control (also includes illustrated parts 2, 8(2), 10 and 201; illustrated part 3 also included for Models 33H51, 33H51-EU, 33J51, 33J51-EU, 33SK51, 33SK51-EU)		
	for Models ending in -EU	R33H51-EU-RC40	R33SM51-EU-RC40
	for all other Models	R33H51-RC40	R33SM51-RC40
*	Nameplate		
	for Models ending in -EU	R2H-EU-99	R2H-EU-99
	for all other Models	R2H-99	R2H-99
*	Warning Label		
	for Models ending in -EU	EU-99	EU-99
	for all other Models	WARNING-10-99	WARNING-10-99
203	Forward Inlet Stud	R22H-471	R22H-471
204	Forward Inlet Stud Lock Screw	TCCW-433	TCCW-433
205	7/16" Lock Washer	D02-537	D02-537
206	Reverse Inlet Stud	R33H-472	R33H-472
207	Reverse Inlet Stud Lock Screw	T05-44	T05-44
	Spindle Assembly (also includes illustrated parts 83 and 84 for Models 33H51, 33H51-EU, 33J51, 33J51-EU, 33SK51 and 33SK51-EU; illustrated parts 84, 85, 86(3), 87(3), 88(3), 89(54) and 90(6) for Models 33SM51 and 33SM51-EU)		
	for Models 33H51 and 33H51-EU	R3H51-A8	---
	for Models 33J51 or 33J51-EU	R3J51-A8	---
	for Models 33SK51 or 33SK51-EU	R3SK51-A8	---
	for Models 33SM51 or 33SM51-EU	---	R33SM51-B8
208	Spindle	R3H51-8	R33SM51-8
209	Spindle Key	R40-610	R40-610
210	Backhead (also includes illustrated parts 16, 17 (2), 18 (8), 20 and 21)	R3H-102A	R3H-102A
211	Oil Chamber Plug	T1SE-368	T1SE-368
212	Gear Case	R3H51-37	---
213	Grease Fitting	23-188	---
214	Gear Case Cover	---	R33SM51-378
215	Spindle Packing Nut	---	R44SM51-15
216	Governor Valve Auxiliary Spring (used only in Motors with Remote Control)	P35-431	P35-431
217	Motor Mounting Stud	R33SM51-290	R33SM51-290
218	Motor Mounting Stud Cap	R33SM51-461	R33SM51-461
219	Rear Mounted Bracket	R33SM51-304	R33SM51-304
220	Rear Mounted Bracket Spacer	R33SM51-277	R33SM51-277
221	Front Mounting Bracket	R3H51-303	R33SM51-303
222	Motor Housing Anchor	R33SM51-364	R33SM51-364
223	Motor Mounting Base	R22N51-564A	R22N51-564A
225	Base Cap Screw Lock Washer (4)	D02-321	D02-321

* Not Illustrated

Parts and Maintenance

When the life of the tool has expired, it is recommended that the tool be disassembled, degreased and parts be separated by material so that they can be recycled.

Tool repair and maintenance should only be carried out by an authorized Service Center.

Refer all communications to the nearest **Ingersoll Rand** Office or Distributor.

Related Documentation

For additional information refer to:
Product Safety Information Manual 04580353.
Product Information Manual 16598039.
Maintenance Information Manual16596199.

Manuals can be downloaded from www.irtools.com.

Notes:

Notes:

Notes:

www.irtools.com

© 2008 ***Ingersoll Rand*** *Company*

Ingersoll Rand