RESERVDELSINFORMATION / PARTS INFORMATION

G3 Angle Parts Information

Ingersoll Rand G3L086PS10 · G3L086PP95 · G3A120PP95AV · G3A120PP945AV · G3A120PG4M · G3A100PP96AV

Originaldokument: Ingersoll Rand

Tillhandahålls av Professional Technologies Sweden AB

Original document by Ingersoll Rand, provided by
Professional Technologies Sweden AB - authorized Ingersoll Rand distributor.

Produkt / Product: skanna QR-koden · scan QR

Service · Kalibrering · Originalreservdelar

Service · Calibration · Genuine spare parts

protech.nu

protech@protech.nu · +46 303-891 35

Munkerödsvägen 5, 444 32 Stenungsund, Sverige · Org.nr 556684-8270

Ingersoll Rand och logotypen är varumärken som tillhör Ingersoll Rand Inc. Ingersoll Rand and the logo are trademarks of Ingersoll Rand Inc.

80153232
Edition 7
September 2008

Air Grinder, Die Grinder and Sander

G3 Series (Angle)

Parts Information

Save These Instructions

Ingersoll Rand

G3 Series (Angle) Air Grinder, Die Grinder and Sander Exploded Diagram - Body

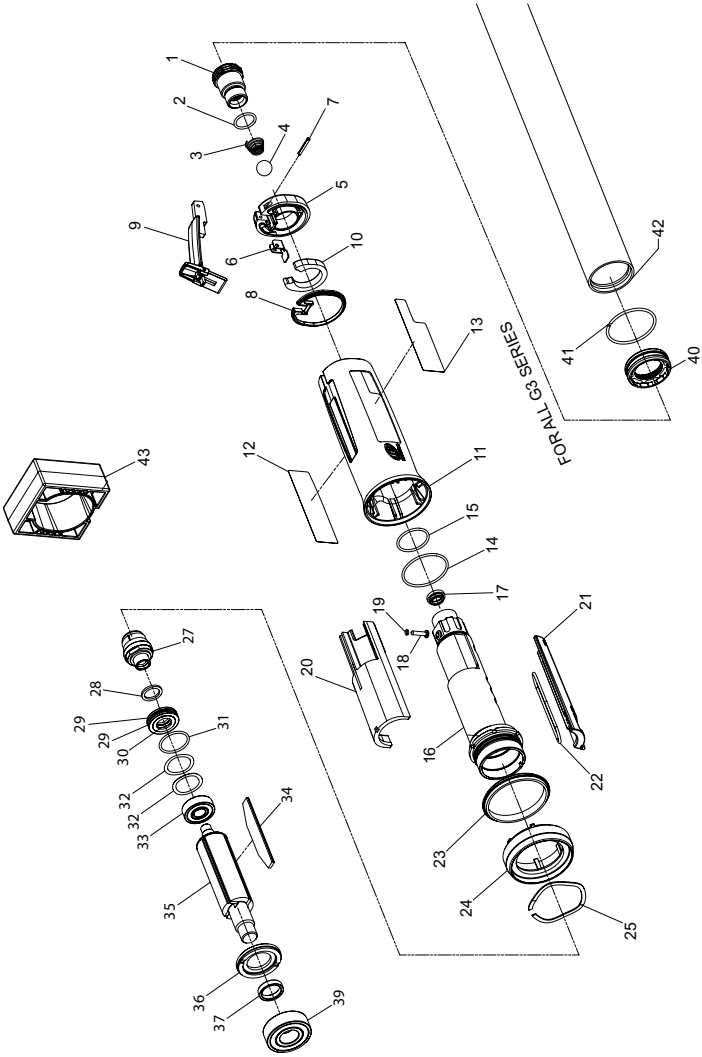

(Dwg. 16577785)

G3 Series (Angle) Air Grinder, Die Grinder and Sander Parts List - Body

Item	Part Description	Part Number	Item	Part Description	Part Number
	Common parts for all G3 models		23	Front Housing Seal	AG3-283
1	Inlet Assembly	AG3-A465	24	Front Housing Cap	AG3-202
*	Inlet Screen	R1602-61	25	Flange Clamp	10560944
2	Inlet Seal	85H-167	27	18.0 K Controller Assembly for 120 models	AG3-422-A18
3	Ball Valve Spring	AG3-51		15.0 K Controller Assembly for 100 models	AG3-422-A15
4	Ball	D10-280		14.2 K Controller Assembly for 086 models	AG3-422-A14.2
5	Rear Exhaust Diffuser	AG3-123	28	Felt Seal	AG3-31A
6	Lever Support	AG3-89	29	Seal Carrier (2)	AG3-26
7	Throttle Lever Pin	61H-120	30	Ring Seal	AG3-26-4
8	Rear Exhaust Diffuser Gasket	AG3-223	31	O-ring	AD100-18
9	Lever Assembly	AG3-A400	32	Rear Rotor Bearing Spacer (2)	80103674
*	Lever	--	33	Rear Rotor Bearing	80146798
*	Lock Spring	45778	34	Vane Pack	AG3-42-4
*	Lock Pin	D92-152	35	Rotor	AG3-53-4A
*	Lever Lock	--	36	Front End Plate	AG3-11
10	Rear Exhaust Diffuser Muffler	AG3-311B	37	Front End Plate Spacer	AG3-65
11	Motor Housing Assembly	AG3-A40	39	Front Rotor Bearing	AG3-24
12	Warning Label	AG3-99	*	Exhaust Hose Adapter Kit	AG3-K284
13	Model Label	AG3-301	40	Adapter	LG2-184
14	Front Cylinder O-Ring	80152762	41	Retainer	6WT-203
15	Rear Cylinder O-Ring	16570756	42	Hose	AG3-284
16	Cylinder Assembly	AG3-A3	43	Clamp Tool	AG3-598
*	Throttle Bushing	--	*	Tune Up Kit	
17	Ball Valve Seat	--		Includes Part Number (2, 3, 4, 8, 10, 14, 15,	AG3-TK1
18	Throttle Pin Assembly	AG2-A161		18, 23, 24, 25, 29, 30, 31, 32, 33, 34 & 39)	
19	Throttle Pin O-Ring	16570806	*	Rotor Kit	
20	Flow Guide	AG3-200		Includes Part Number (32, 33, 34, 35, 36,	AG3-422-A18
21	Intake Cover Assembly	AG3-A144		37 & 39)	AG3-A53-4A
22	Intake Cover O-Ring	80150881			

* Not Illustrated.

G3A and G3L Models (Except G3L086) (Angle) Air Grinder and Die Grinder Exploded Diagram - End

FOR ALL G3A MODELS

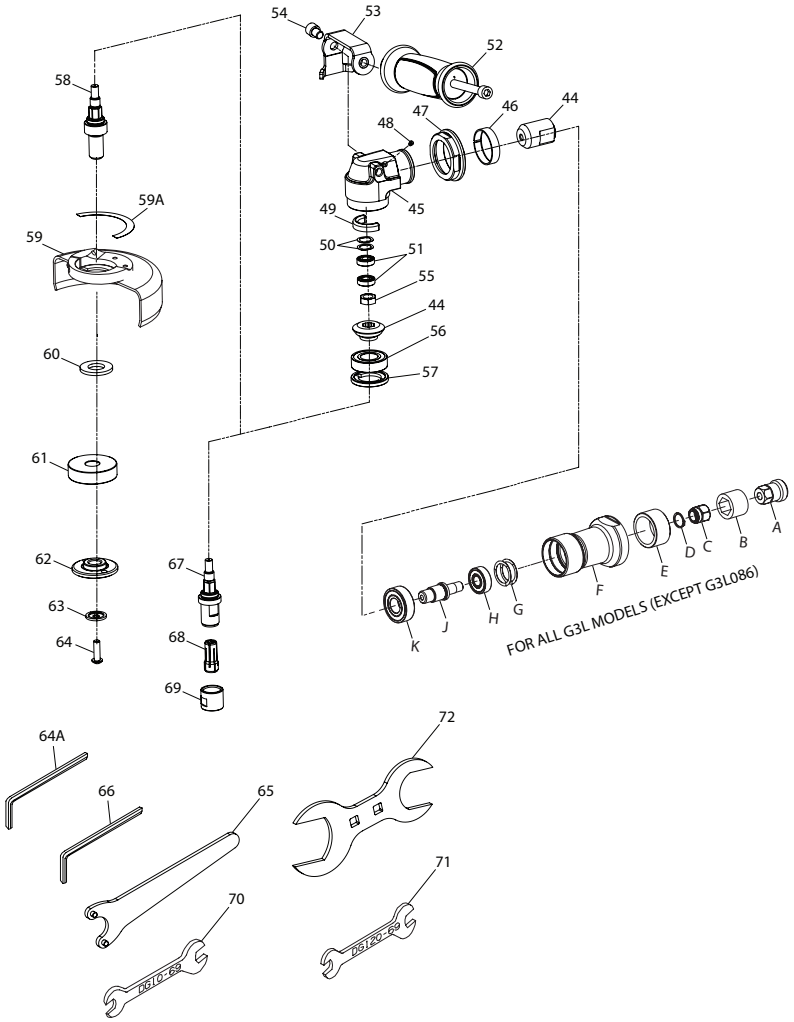

(Dwg. 16577843-1)

G3A and G3L Models (Except G3L086) (Angle) Air Grinder and Die Grinder Parts List - End

Item	Part Description	Part Number
	Additional parts for all G3A models	
44	Bevel Pinion and Bevel Gear (sold only as a matched set)	AG3-A552-1.5
45	Angle Housing Assembly	AG3-A550S
46	Clamp Spacer	AG3-46
47	Clamp Nut	AG3-27
48	Grease Fitting	D0F9-879
49	Wick	AG3-560A
50	Washer (2)	DG20-278
51	Upper Arbor Bearing (2)	80123136
	Handle Assy	AG3-A48
52	Handle	AG2-48
53	Bracket	AG3-766
54	Screw	80217243
55	Bevel Gear Nut	95085916
56	Lower Arbor Bearing	AG3-105
57	Arbor Bearing Cap	AG3-18
	Additional parts for all G3L models (Except G3L086)	
A	Bearing Nut	AG3-85
B	Arbor Coupling	61H-304
C	Bearing Nut Assembly	61H-A85
D	Retaining Ring	P4800-119
E	Sleeve	AG3-176
F	Extension Housing	AG3-20L
G	Spring Washer (2)	7AH-278
H	Bearing	WFS182-22
J	Extension Arbor	AG3-4
K	Bearing	AG3-24
	Additional parts for all G3A wheel models	
58	Arbor	
	for models ending in P1045, P105, P106	AG3-4-105
	for models ending in P945, P95, P96	AG3-4-95

Item	Part Description	Part Number
59	Wheel Guard Replacement Kits	
	for models ending in P1045, P945, P945A	AG3-A106-45
	for models ending in P105, P95, P95A	AG3-A106-5
	for models ending in P106, P96, P96A	AG3-A106-6
59A	Guard Warning Label	AG2-99G
60	Flange Spacer	R3F-286
61	Wheel Flange	
	for models ending in A, AV	AG3-713M
	for models ending in P1045, P105, P106	AG3-337-5
	for models ending in P945, P95, P96	AG3-337-5M
62	Flange Nut	
	for models ending in P1045, P105, P106	AG3-338-5
	for all other models	AG3-338-5M
63	Wheel Retaining Washer	LG2-218
64	Wheel Retaining Screw	LG2-219M
64A	Hex Key (4mm)	AG2-562
	Accessories for all wheel models	
65	Flange Nut Wrench	AG3-26M
66	Arbor Wrench	AG230-340M
	Additional parts for models ending in G4 and G4M	
67	Collet Arbor	AG3-4-G4
68	Collet	
	for models ending in G4M	G-160HD-700-1/4
	for models ending in G4M	G160HD-700-6MM
69	Collet Nut	AG3-4-95DG120-699A
	Accessories for models ending in G4 and G4M	
70	Collet body Wrench	DG10-69
71	Collet nut Wrench	DG120-69
	Accessories for all models	
72	Clamp Nut Wrench	AG3-253

G3L086 Series (Angle) Air Grinder and Sander Exploded Diagram - End

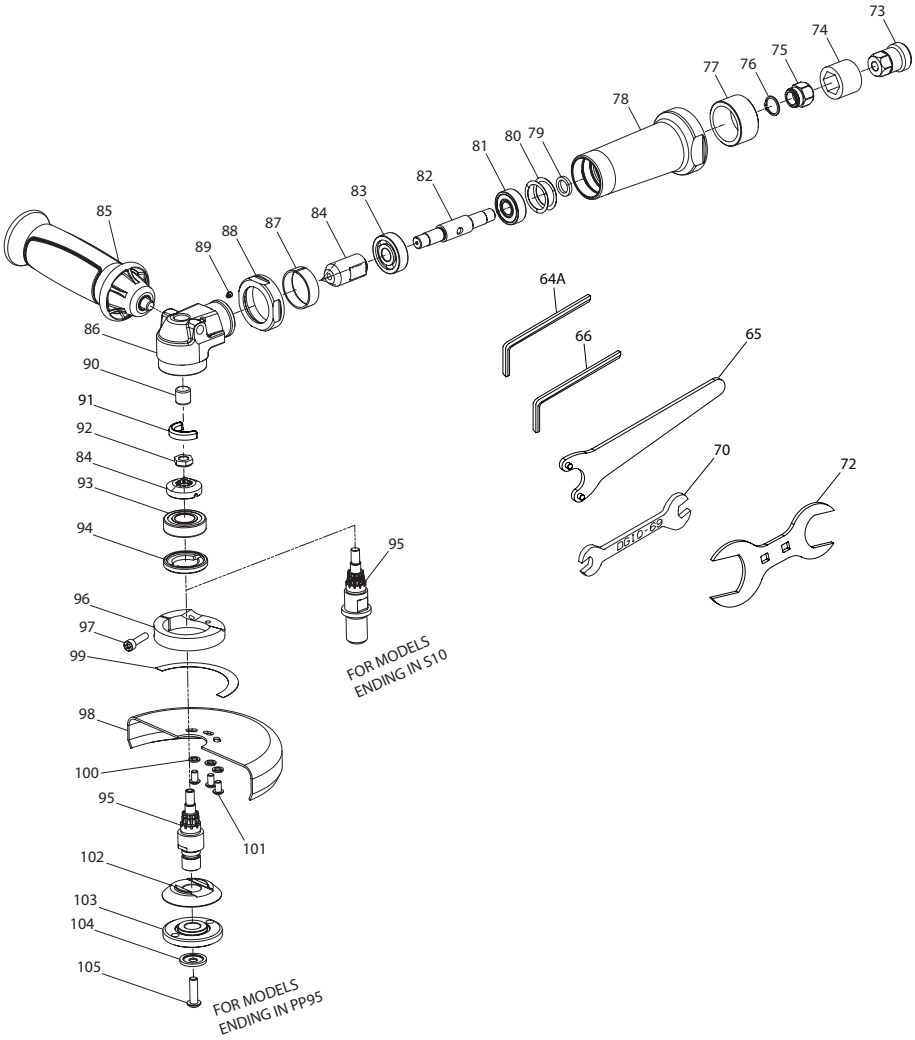

(Dwg. 10561439)

G3L086 Series (Angle) Air Grinder and Sander Parts List - End

Item	Part Description	Part Number
	Additional parts for all G3L086 models	
73	Bearing Nut	AG3-85
74	Arbor Coupling	61H-304
75	Bearing Nut Assembly	61H-A85
76	Retaining Ring	R4800-119
77	Sleeve	AG3-176
78	Extension Housing	AG3-20
79	Spacer	80219496
80	Washer (2)	7AH-278
81	Bearing	WFS182-22
82	Extension Arbor	LA3-4
83	Bearing	LG2-24
84	Bevel Gear Assembly	LA2-A552-1.7
85	Handle	AG2-48
86	Angle Head Assembly	AG2-A550S
87	Clamp Spacer	LA2-46
88	Clamp Nut	LG2-27
89	Grease Fitting	D0F9-879
90	Upper Arbor Bearing	AG210-693
91	Wick	LA2-560
92	Bevel Gear Locknut	LA2-578
93	Front Arbor Bearing	LA2-593
94	Arbor Bearing Cap	AG20-531
95	Arbor	
	for models ending in S10	LAS2-204-P10
	for models ending in PP95	AG230-4-945

Item	Part Description	Part Number
	Additional parts for all G3L086 wheel models	
96	Guard Adapter Assembly	AG2-A710
97	Guard Adapter Screw	95223151
	Wheel Guard Assembly	LA3-A106-5-EU
98	Wheel Guard	LA3-106-5-EU
99	Guard Warning Label	AG2-99G
100	Guard Lock Washer (3)	R2-320-10
101	Guard Mounting Screw (3)	AG31-667-4
102	Wheel Flange	LG3-337-45M
103	Flange Nut	AG230-338-45M
104	Wheel Retaining Screw Washer	LG2-218
105	Wheel Retaining Screw	LG2-219M
	Accessories For all G3L wheel models	
65	Flange Nut Wrench	AG3-26M
66	Arbor Wrench	AG230-340M
	Accessories For all G3L Sanders	
70	Arbor Wrench	DG10-69
	Accessories for all models	
72	Clamp Nut Wrench	AG3-253

Parts and Maintenance

When the life of the tool has expired, it is recommended that the tool be disassembled, degreased and parts be separated by material so that they can be recycled.

Tool repair and maintenance should only be carried out by an authorized Service Center.

Refer all communications to the nearest **Ingersoll Rand** Office or Distributor.

Related Documentation

For additional information refer to:
Product Safety Information Manual 04584959, 04580288 and 04580387.
Product Information Manual 80153208, 80153190 and 80223241.

Manuals can be downloaded from www.irtools.com.

www.irtools.com

© 2008 ***Ingersoll Rand*** *Company*

Ingersoll Rand