RESERVDELSINFORMATION / PARTS INFORMATION

G4621 - Parts Information

Ingersoll Rand G4621 · G4621-K22

Originaldokument: Ingersoll Rand

Tillhandahålls av Professional Technologies Sweden AB
Original document by Ingersoll Rand, provided by
Professional Technologies Sweden AB - authorized Ingersoll Rand distributor.

Produkt / Product: skanna QR-koden · scan QR

Service · Kalibrering · Originalreservdelar

Service · Calibration · Genuine spare parts

protech.nu
protech@protech.nu · +46 303-891 35
Munkerödsvägen 5, 444 32 Stenungsund, Sverige · Org.nr 556684-8270

Ingersoll Rand och logotypen är varumärken som tillhör Ingersoll Rand Inc. Ingersoll Rand and the logo are trademarks of Ingersoll Rand Inc.

G4621, 20V Cordless Polisher/Sander - Exploded View

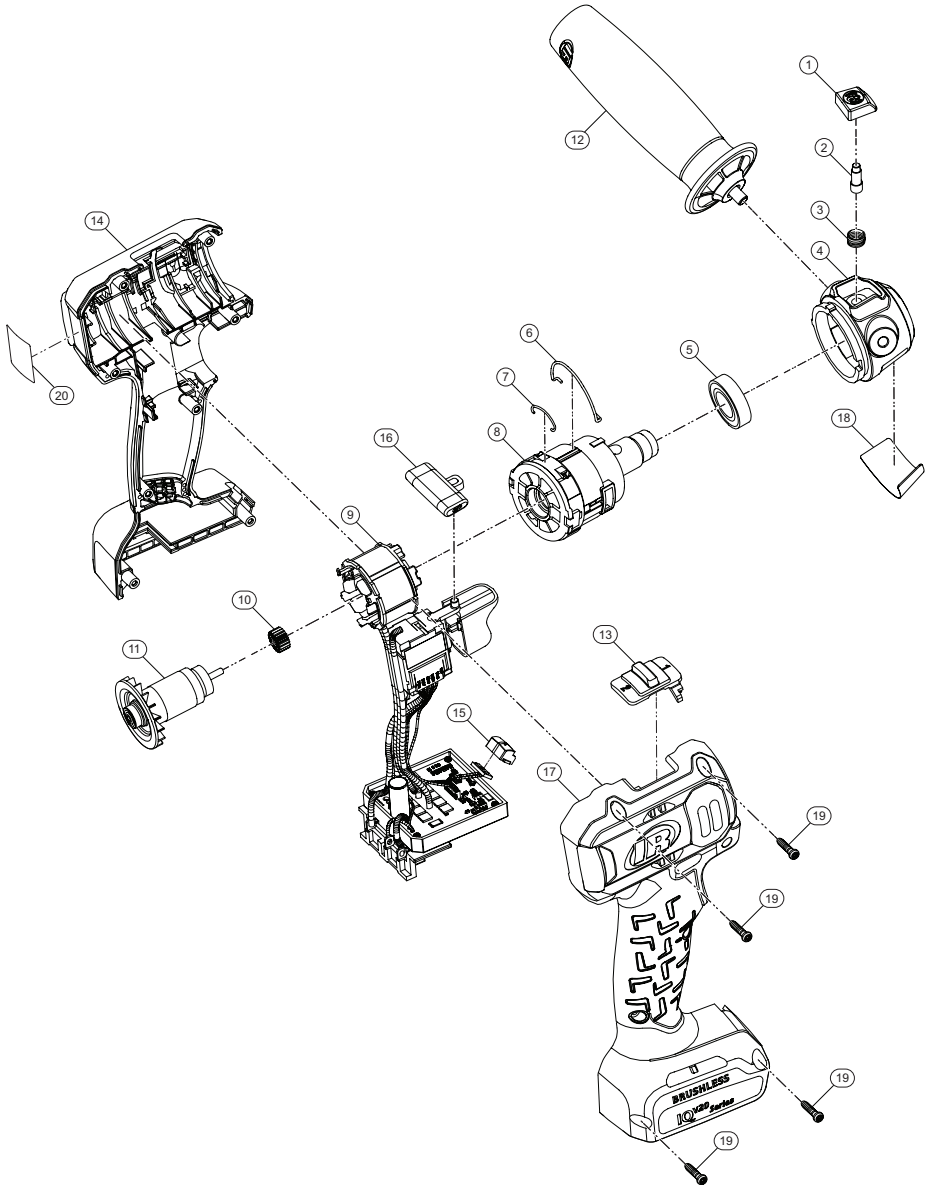

(Dwg. G4621)

G4621, 20V Cordless Polisher/Sander - Parts List

Item	Part Description	Part Number (CCN)	Item	Part Description	Part Number (CCN)
	Front Case Kit	TK-G4621-727		Screw Kit	TK-G4621-105
1	Button, Spindle Lock	TP-G4621-31	19	Housing Screws (8 required)	TP-G4621-105
2	Lock Spindle	TP-G4621-531		Label Kit	TK-G4621-99
3	Spring, Spindle Lock	TP-G4621-248	18	Warning Label (front case)	TP-G4621-099
4	Front Case	TP-G4621-727	20	Warning Label	TL-D3100-099
5	Ball Bearing	TP-G4621-24	*	20V Li-ion Battery Pack (IQV20 Series batteries)	
	Shift Wire Kit	TK-G4621-750		2.5Ah	BL2012
6	Shift Wire, no.1	TP-G4621-251		2.8Ah	BL2013
7	Shift Wire, no.2	TP-G4621-250		5.0Ah	BL2022
8	Gear Box Assembly Kit	TP-G4621-A750		5.6Ah	BL2023
9	Stator-Switch-PCB-Battery Connector Kit	TP-G4621-A52	*	Battery Charger	
	Rotor Kit	TK-G4621-53		Battery Charger, Single Bay	BC1121
10	Pinion	TP-G4621-13		Battery Charger, Dual Bay	BC1221
11	Rotor	TP-G4621-53	*	Accessory Kit	TK-G4621-225
	Auxiliary Handle Kit	TK-G4621-48		2" Backing Pad (for Sander)	---
12	Auxiliary Handle	TP-G4621-A48		3" Backing Pad	---
	Housing Kit	TK-G4621-40		3" Hook and Loop Backing Pad (for Polisher)	---
13	High/Low Speed Switch	TP-G4621-249		3" Hook and Loop T80 Foam Pad	---
14	LH Housing	TP-G4621-40LH		3" Hook and Loop T10 Foam Pad	---
15	LED Cover	TP-G4621-144		3" Hook and Loop Wool Pad (for Polisher)	---
16	Trigger Lock Kit	TP-G4621-75			
17	RH Housing	TP-G4621-40RH			

* Indicates not illustrated.

Parts and Maintenance

When tool life has expired, it is recommended that the tool be disassembled, degreased and parts separated by material for proper recycling.

Tool repair and maintenance should only be carried out by an Authorized Service Center.

Refer all communications to the nearest **Ingersoll Rand** office or distributor.

Related Documentation

Manuals can be downloaded from **ingersollrand.com**

For additional information, refer to:

Product Safety Information Manual 47542671001
Product Information Manual TL-G4621-PIM
Declaration of Conformity TL-G4621-DOC

© 2023 Ingersoll Rand