RESERVDELSINFORMATION / PARTS INFORMATION

G4911 - Parts Information

Ingersoll Rand G4911 · G4911-K1

Originaldokument: Ingersoll Rand

Tillhandahålls av Professional Technologies Sweden AB

Original document by Ingersoll Rand, provided by
Professional Technologies Sweden AB - authorized Ingersoll Rand distributor.

Produkt / Product: skanna QR-koden · scan QR

Service · Kalibrering · Originalreservdelar

Service · Calibration · Genuine spare parts

protech.nu

protech@protech.nu · +46 303-891 35

Munkerödsvägen 5, 444 32 Stenungsund, Sverige · Org.nr 556684-8270

Ingersoll Rand och logotypen är varumärken som tillhör Ingersoll Rand Inc. Ingersoll Rand and the logo are trademarks of Ingersoll Rand Inc.

G4911, Cordless Tire Buffer - Exploded View

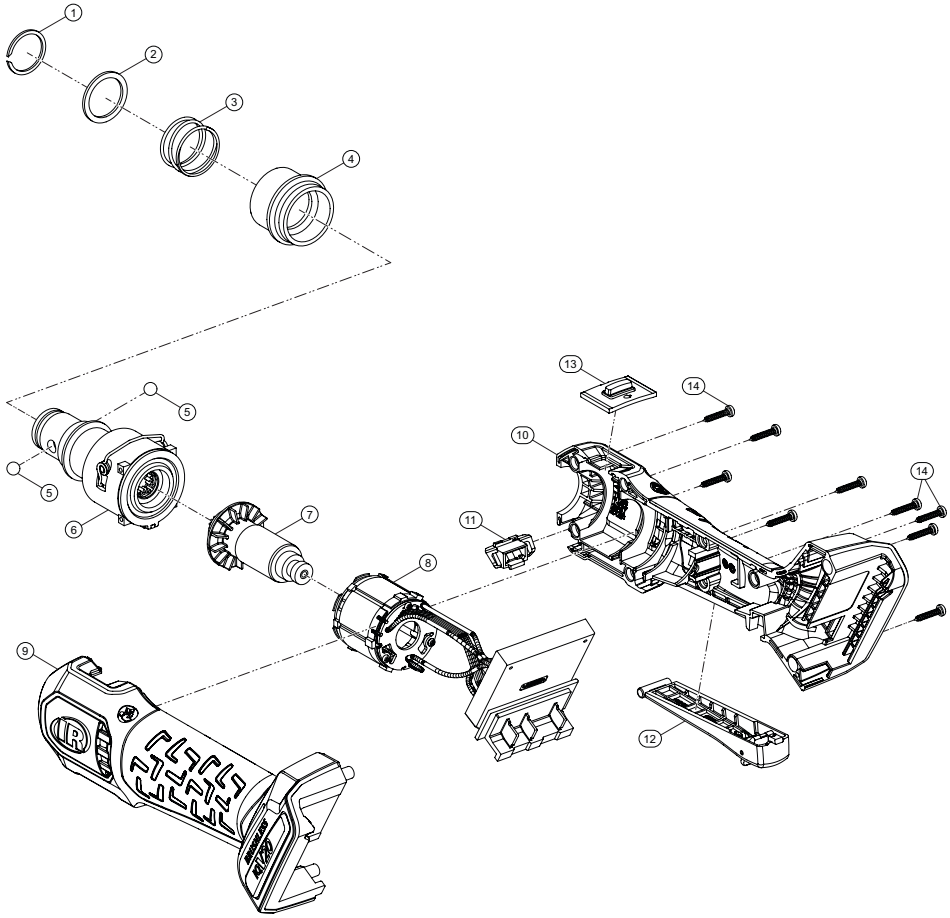

(Dwg. TL-G4911-PLM-1)

G4911, Cordless Tire Buffer - Parts List

Item	Part Description	Part Number (CCN)
*	Gearbox Kit	TK-G4911-750
1	Retaining Ring for Shaft	---
2	Flat Washer	
3	Pressure Spring	
4	Lock Sleeve	
5	Ball (2 required)	
6	Gearbox Assembly	
*	Chuck Kit	TK-G4911-255
1	Retaining Ring for Shaft	---
2	Flat Washer	
3	Pressure Spring	
4	Lock Sleeve	
5	Ball (2 required)	
7	Motor Rotor Kit	TK-G4911-013
8	Stator-Switch and LED Kit	TK-G4911-052
*	Housing Kit	TK-G4911-040
9	Left Housing	---
10	Right Housing	
14	Screw (9 required)	

Item	Part Description	Part Number (CCN)
11	LED Lens Kit	TK-G4911-144
*	Trigger Kit	TK-G4911-093
12	Switch Trigger Assembly	---
13	Speed Selector	
14	Fastener Kit	TK-G4911-078
*	20V Li-ion Battery Pack	
	2.5 Ah	BL2012 (47515903001)
	5.0 Ah	BL2022 (47515902001)
*	Battery Charger	
	Battery Charger, Single Bay	BC1121 (47507879001)
	Battery Charger, Dual Bay	BC1221
*	Protective Battery Boot	
	For 2.5 Ah and 2.8 Ah Batteries	BL2005-BOOT (47510965001)
	For 5.0 Ah and 5.6 Ah Batteries	BL2010-BOOT (47510964001)
*	Storage/Carrying Bag	TB4 (47543666001)

* Indicates not illustrated.

Parts and Maintenance

When tool life has expired, it is recommended that the tool be disassembled, degreased and parts separated by material for proper recycling.

Tool repair and maintenance should only be carried out by an Authorized Service Center.

Refer all communications to the nearest **Ingersoll Rand** office or distributor.

Related Documentation

Manuals can be downloaded from **ingersollrand.com**

For additional information, refer to:

Product Safety Information Manual TL-G4911-SIM
Product Information Manual TL-G4911-PIM
CE-Declaration of Conformity TL-G4911-DOC
UK-Declaration of Conformity TL-G4911-DOC-UK

© 2024 Ingersoll Rand