Professional Technologies Sweden AB

Auktoriserad Ingersoll Rand-distributör · Authorized Ingersoll Rand distributor

BRUKSANVISNING / USER MANUAL

Zero Gravity 2.0 Air Balancer User Manual

Ingersoll Rand

Originaldokument: Ingersoll Rand

Tillhandahålls av Professional Technologies Sweden AB

Original document by Ingersoll Rand, provided by

Professional Technologies Sweden AB - authorized Ingersoll Rand distributor.

Produkt / Product: skanna QR-koden · scan QR

Service · Kalibrering · Originalreservdelar

Service · Calibration · Genuine spare parts

protech.nu

protech@protech.nu · +46 303-891 35

Munkerödsvägen 5, 444 32 Stenungsund, Sverige · Org.nr 556684-8270

Ingersoll Rand och logotypen är varumärken som tillhör Ingersoll Rand Inc. Ingersoll Rand and the logo are trademarks of Ingersoll Rand Inc.

47804819
Edition 3
August 2023

Zero Gravity Air Balancer 2.0

ZG Series

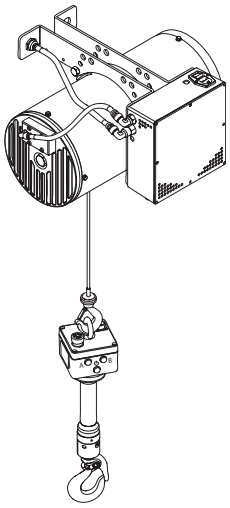

User Manual

EN User Manual

ingersollrand.com

47804819

EN User Manual
ES Manual del Usuario
FR Manuel d'utilisation
IT Manuale utente
DE Benutzerhandbuch
NL Gebruiksaanwijzing
DA Brugervejledning
SV Användarmanual
NO Brukermanual
PT Manual do Usuário
SL Uporabniški priročnik
CS Uživatelská příručka
HU Felhasználói kézikönyv
PL Instrukcja obsługi
BG Ръководство за потребителя
RO Manual de utilizare
TR Kullanıcı Kılavuzu

Save these Instructions

Ingersoll Rand

Hazard Statements

EN

CAUTION

- **To reduce the risk of electric shock, do not expose to rain. For Indoor use only.**
- **Do not operate Electropneumatic balancers in explosive atmospheres, such as the presence of flammable liquids, gases or dust. Electropneumatic balancers create sparks which may ignite the dust or fumes.**

WARNING

- **Prior to installation, refer to Product Safety Information Manual for all sections of installation.**
- **Before performing maintenance, securely tag the controls with a warning label stating: 'WARNING - DO NOT OPERATE - EQUIPMENT BEING REPAIRED'.**

Declaraciones de Peligro

ES

PRECAUCIÓN

- **Para reducir el riesgo de descarga eléctrica, evite la exposición a la lluvia. Solo para uso en interiores.**
- **No utilice los equilibradores electroneumáticos en ambientes explosivos tales como en caso de presencia de líquidos inflamables, gases o polvo. Los equilibradores electroneumáticos originan chispas que pueden inflamar el polvo o los vapores.**

ADVERTENCIA

- **Antes de la instalación, consulte todas las secciones de instalación del Manual de información de seguridad del producto.**
- **Antes de realizar tareas de mantenimiento, marque de forma segura los controles con una etiqueta de advertencia que indique: «ADVERTENCIA: NO UTILIZAR. EQUIPO EN REPARACIÓN».**

Déclarations de Danger

FR

ATTENTION

- **Pour réduire le risque d'électrocution, n'exposez pas l'appareil à la pluie. Utilisation en intérieur uniquement.**
- **N'utilisez pas les équilibreurs électropneumatiques dans des atmosphères explosives, par exemple en présence de liquides inflammables, de gaz ou de poussière. Les équilibreurs électropneumatiques produisent les étincelles qui risquent d'enflammer la poussière ou les vapeurs.**

AVERTISSEMENT

- **Avant l'installation, consultez le manuel d'information sur la sécurité du produit pour toutes les sections de l'installation.**
- **Avant de procéder à l'entretien, apposez une étiquette d'avertissement sur les commandes : « AVERTISSEMENT – NE PAS UTILISER – L'ÉQUIPEMENT EST EN COURS DE RÉPARATION ».**

Dichiarazioni di pericolo

IT

ATTENZIONE

- **Per ridurre il rischio di scosse elettriche, non esporre alla pioggia. Solo per uso interno.**
- **Non utilizzare gli equilibratori elettropneumatici in atmosfera esplosiva, come in presenza di liquidi infiammabili, gas o polvere. Gli equilibratori elettropneumatici creano scintille che possono dar fuoco a polveri o fumi.**

AVVERTIMENTO

- **Prima dell'installazione, fare riferimento al Manuale informativo sulla sicurezza del prodotto per tutte le sezioni dell'installazione.**
- **Prima di eseguire la manutenzione, contrassegnare in modo sicuro i controlli con un'etichetta di avvertenza che indichi: "AVVERTENZA - NON UTILIZZARE - APPARECCHIATURA IN RIPARAZIONE".**

gefahrErklärung

DE

VORSICHT

- **Setzen Sie das Gerät nicht dem Regen aus, um das Risiko eines Stromschlags zu verringern. Nur für Innenräume geeignet.**
- **Betreiben Sie elektrische Ausgleichsvorrichtungen nicht in explosiven Umgebungen, etwa in der Nähe entflammbarer Flüssigkeiten, Gase oder Stäube. Elektrische Ausgleichsvorrichtungen erzeugen Funken, die diese Stäube oder Dämpfe entzünden könnten.**

WARNUNG

- **Lesen Sie vor der Installation das Handbuch zur Produktsicherheit für alle Installationsabschnitte.**
- **Versehen Sie die Bedienelemente vor der Wartung mit Warnschildern, auf denen Folgendes steht: „WARNUNG – NICHT BEDIENEN – GERÄT WIRD REPARIERT".**

gevaren verklarings

NL

OPGELET

- **Stel het apparaat niet bloot aan regen om het risico op elektrische schokken te beperken. Alleen voor gebruik binnenshuis.**
- **Bedien elektropneumatische balancers niet in explosieve omgevingen zoals in de aanwezigheid van brandbare vloeistoffen, gassen of stof. Elektropneumatische balancers kunnen vonken veroorzaken, wat kan leiden tot ontbranding van stof of dampen.**

WAARSCHUWING

- **Raadpleeg vóór de installatie de handleiding met productveiligheidsinformatie voor alle installatieonderdelen.**
- **Voordat u onderhoud uitvoert, moet u de bedieningselementen voorzien van een waarschuwingslabel met de volgende tekst: 'WAARSCHUWING - NIET BEDIENEN - APPARATUUR WORDT GEREPAREERD'.**

faresætninger

DA

FORSIGTIG

- **Må ikke udsættes for regn, idet der er risiko for elektrisk stød. Kun til indendørs brug.**
- **Benyt ikke elektro-pneumatiske balanceklodser i eksplosive atmosfærer, såsom i nærheden af brandbare væsker, gasser eller støv. Elektro-pneumatiske balanceklodser genererer gnister, som kan antænde støvet eller dampene.**

ADVARSEL

- **Inden installationen skal alle afsnittene om installation i produktsikkerhedsvejledningen læses.**
- **Før du udfører vedligeholdelse, skal kontroller afmærkes tydeligt med en advarselsmærkat, der angiver: "ADVARSEL - MÅ IKKE BETJENES – UDSTYR REPARERES".**

Faroangivelser

SV

VAR FÖRSIKTIG

- **För att minska risken för elektriska stötar ska verktyget inte utsättas för regn. Endast för inomhusbruk.**
- **Använd inte elektropneumatiska balanserare i explosiva atmosfärer, såsom i närheten av lättantändliga vätskor, gaser eller damm. Elektropneumatiska balanserare skapar gnistor vilka kan antända dammet eller ångorna.**

VARNING

- **Se produktsäkerhetshandboken innan du påbörjar installationen för alla delar av installationen.**
- **Innan du utför underhåll ska du noggrant märka styrenheterna med följande varningsetikett: "VARNING – ANVÄND INTE – UTRUSTNINGEN REPARERAS."**

Faresetninger

NO

OBS!

- **Ikke utsett for regn for å redusere risikoen for elektrisk støt. Kun for innendørs bruk.**
- **Ikke bruk elektroneumatiske balansere i eksplosive atmosfærer, slik som tilstedeværelse av brannfarlige væsker, gasser eller støv. Elektroneumatiske balansere skaper gnister som kan antenne støvet eller røyken.**

ADVARSEL

- **Se håndboken for produktsikkerhetsinformasjon for alle deler av installasjonen før installasjon.**
- **Merk kontrollene sikkert med en advarselsetikett som sier før du utfører vedlikehold: 'ADVARSEL - IKKE BRUK - UTSTYR BLIR REPARERT'.**

Declarações de Perigo

PT

ATENÇÃO

- **Para reduzir o risco de choque elétrico, não expor à chuva. Apenas para utilização no interior.**
- **Não utilize equilibradores eletropneumáticos em atmosferas explosivas como, por exemplo, na presença de líquidos, gases ou poeiras inflamáveis. Os equilibradores eletropneumáticos produzem faíscas que podem incendiar poeiras ou gases.**

AVISO

- **Antes da instalação, consulte o Manual de Informações de Segurança do Produto quanto a todas as secções de instalação.**
- **Antes de efetuar a manutenção, coloque uma etiqueta de aviso nos comandos com a indicação "AVISO - NÃO OPERAR - EQUIPAMENTO EM REPARAÇÃO".**

Stavki o nevarnosti

SL

POZOR

- **Ne izpostavljajte dežju, da zmanjšate nevarnost električnega udara. Samo za uporabo v zaprtih prostorih.**
- **Elektropnevmatskih škripcev ne uporabljajte v eksplozivnem ozračju, kot je na primer v bližini vnetljivih tekočin, plinov ali praha. Elektropnevmatski škripci lahko med uporabo povzročijo iskre, ki lahko vžgejo prah ali pare.**

OPOZORILO

- **Pred namestitvijo si oglejte priročnik z informacijami o varnosti izdelka za vse dele namestitve.**
- **Pred vzdrževanjem varno označite upravljalne elemente z opozorilno oznako, ki navaja: »OPOZORILO – NE UPORABLJAJTE – POTEKA POPRAVILO OPREME«.**

prohlášení o nebezpečnosti

CS

UPOZORNĚNÍ

- **Abyste snížili riziko úrazu elektrickým proudem, nevystavujte dešti. Pouze pro vnitřní použití.**
- **Elektropneumatické vyvažovačky neprovozujte ve výbušné atmosféře, jaká například vznikne přítomností hořlavých kapalin, plynů či prachu. Elektropneumatické vyvažovačky mohou vytvářet jiskry, které mohou způsobit vznícení prachu nebo výparů.**

VAROVÁNÍ

- **Před instalací si prostudujte Příručku s bezpečnostními informacemi pro všechny části instalace.**
- **Před prováděním údržby bezpečně označte ovládací prvky výstražným štítkem uvádějícím: „VAROVÁNÍ – NEPRACUJTE – ZAŘÍZENÍ SE OPRAVUJE“.**

Veszély nyilatkozatok

HU

FIGYELEM

- **Az áramütés kockázatának csökkentése érdekében ne tegye ki a szerszámot esőnek. Az kizárólag beltéri használatra való.**
- **Ne használja az elektro-pneumatikus kiegyenlítőket robbanásveszélyes körülmények között, mint pl. gyúlékony folyadékok, gázok vagy por közelében. Az elektro-pneumatikus kiegyenlítők működése közben szikrák keletkeznek, amelyek begyújthatják a port vagy a gőzöket.**

VIGYÁZAT

- **A telepítés előtt olvassa el a termékbiztonsági információs útmutatóban a telepítés egyes fázisaira vonatkozó tudnivalókat.**
- **A szerszám karbantartása előtt helyezzen el egy figyelmeztető táblát a kezelőszerveken a következő felirattal: „FIGYELMEZTETÉS – NE MŰKÖDTESSE – A BERENDEZÉST JAVÍTJÁK“.**

Zwroty wskazujące rodzaj zagrożenia

PL

UWAGA

- **Aby zmniejszyć ryzyko porażenia prądem elektrycznym, nie wystawiaj urządzenia na działanie deszczu. Wyłącznie do użytku w pomieszczeniach.**
- **Wyrównywaczy elektropneumatycznych nie należy użytkować w miejscach zagrożonych wybuchem, w których znajdują się łatwopalne płyny, gazy czy pyły. Podczas pracy wyrównywaczy elektropneumatycznych powstają iskry, które mogą spowodować zapłon pyłu lub oparów.**

OSTRZEŻENIE

- **Przed instalacją należy zapoznać się ze wszystkimi rozdziałami o instalacji w Instrukcji informacyjnej bezpiecznej instalacji.**
- **Przed przystąpieniem do konserwacji należy bezpiecznie oznaczyć elementy sterujące etykietą ostrzegawczą zawierającą następujące informacje: OSTRZEŻENIE – NIE UŻYWAĆ – URZĄDZENIE JEST NAPRAWIANE.**

изявления опасност

BG

ПРЕДУПРЕЖДЕНИЕ

- **За да намалите риска от токов удар, не излагайте на дъжд. За употреба само на закрито.**
- **Не използвайте електропневматичните балансьори във взривоопасна среда, например при наличието на запалими течности, газове или прах. Електропневматичните балансьори могат да причинят искра, която може да възпламени праха или изпаренията.**

ВНИМАНИЕ

- **Преди монтаж вижте ръководството за информация за безопасност на продукта за всички раздели на монтирането.**
- **Преди извършването на поддръжка маркирайте контролите с добре закрепен предупредителен етикет, който гласи: „ПРЕДУПРЕЖДЕНИЕ – НЕ РАБОТЕТЕ – ОБОРУДВАНЕТО СЕ РЕМОНТИРА“.**

declarații de pericol

RO

ATENŢIE

- **Pentru a reduce riscul de electrocutare, nu expuneți aparatul la ploaie. Numai pentru utilizare în interior.**
- **Nu folosiți dispozitive de echilibrare electropneumatice în atmosfere explozive, ca de exemplu în prezența lichidelor inflamabile, a gazelor sau a prafului. Dispozitivele de echilibrare electropneumatice produc scântei care pot aprinde pulberi sau gaze.**

AVERTIZARE

- **Înainte de instalare, consultați Manualul de informații privind siguranța produsului pentru toate secțiunile de instalare.**
- **Înainte de a efectua lucrări de întreținere, etichetați în mod sigur comenzile cu o etichetă de avertizare care să indice: „AVERTISMENT – NU ACȚIONAȚI – ECHIPAMENTUL ESTE ÎN CURS DE REPARARE".**

Tehlike açıklamaları

TR

İKAZ

- **Elektrik çarpması riskini azaltmak için yağmura maruz bırakmayın. Sadece kapalı alanda kullanım için.**
- **Elektropnömatik dengeleyicileri yanıcı sıvılar, gazlar veya toz gibi patlayıcı ortamlarda çalıştırmayın. Elektropnömatik dengeleyiciler, tozu veya dumanı tutuşturabilecek kıvılcımlar oluşturur.**

UYARI

- **Kurulumdan önce, kurulumun tüm bölümleri için Ürün Güvenlik Bilgileri Kılavuzuna bakın.**
- **Bakım yapmadan önce, kontrolleri aşağıdaki ifadenin bulunduğu bir uyarı etiketi ile güvenli bir şekilde etiketleyin: 'UYARI - ÇALIŞTIRMAYIN - EKİPMAN ONARILMAKTADIR'.**

When tool life has expired, it is recommended to:

- disassemble the tool.
- degrease the tool.
- separate tool parts by material for correct recycling.

Tool repair and maintenance should be conducted by an Authorized Service Center.

Refer all communications to the nearest **Ingersoll Rand** office or distributor.

Manuals are available at ingersollrand.com

Table 1. Product Information Manuals

Publication	**CCN**
Product Safety Information Manual	16598831
Product Information Manual	54072541
Product Parts Information Manual	16598849
Product Installation Manual	47646669
Product Maintenance Manual	16598856
Declaration of Conformity	47808318
ZG Installation Retrofit Kit	47804820

Product Description

The Zero Gravity Air Balancer provides the ability to electronically move loads up and down using the handle actuators or apply force directly to a lifted load.

CAUTION

- **To reduce the risk of electric shock, do not expose to rain. For Indoor use only.**
- **Do not operate Electropneumatic balancers in explosive atmospheres, such as the presence of flammable liquids, gases or dust. Electropneumatic balancers create sparks which may ignite the dust or fumes.**

NOTICE

- **Controller must be used by a single operator. Simultaneous command inputs may result in hazardous movements.**

Specifications

This device needs to be connected to a standard E type plug or B type plug (for other option, contact factory). It works from 100-150 V AC at 50 to 400Hz and the power consumption is 3.5A Max. This system is protected by 2 fuses (characteristics: T type, dimension 5x20 mm, 3.15A 250 V AC). Working pressure of 100 psi (6.9 bar) dry and clean air (30 microns filter must be used).

Model Code Explanation

Example: **ZG 2 W 020 120 S 00 B**

Type of Control Kit

ZG	**=**	**Zero Gravity**
2	**=**	**Gen 2**

Wire

W	**=**	**Wire Rope**

Capacity

015	=	150 lb. (68 kg)
020	**=**	**200 lb. (91 kg)**
035	=	350 lb. (158 kg)
050	=	500 lb. (227 kg)

Inches of Travel

080	=	80 in. (203 cm)
120	**=**	**120 in. (305 cm)**
S	**=**	**Z-Stop**

Type of Suspension Kit

00	**=**	**No Suspension**
AT	=	ZRAT Rail
A1	=	ZRA1 Rail
A2	=	ZRA2 Rail
HM	=	Top Hook Mount
S2	=	ZRS2 Rail

Type of Hook

B	**=**	**Bullard**
C	=	Steel Snap

Note:

a. Gen 1.0 can be converted to Gen 2.0 by ordering handle part number 47808627001 (Bullard Hook Handle) or 47805074001 (Steel Snap Hook Handle) and software update. Refer to Zero Gravity Balancer 2.0 - Kit List on page EN-19.

b. Standard balancer can be converted to Gen 2.0 by ordering respective Kit. Suspension to be ordered separately based on the requirement.

Installation

WARNING

Prior to installation, refer to Product Safety Information Manual for all sections of installation.

1. To mount the ZG balancer, use brackets provided.
2. Connect air supply line to main air inlet using a 3/8" coupling.
3. Use 10 mm pipe for pneumatic connection.

Fig. A

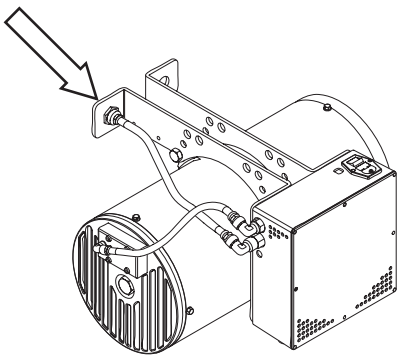

4. Connect power cord to the controller.

Note: Power supply 100-150 V AC, 50-400Hz.

Fig. B

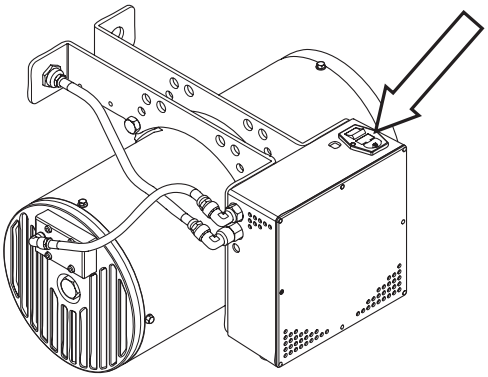

Handle Installation

1. For load hook installation and lash up instructions, refer to the balancer Installation Manual 47646669001.
2. Install the control handle inline with the wire rope and the load (Fig. C).

Fig. C

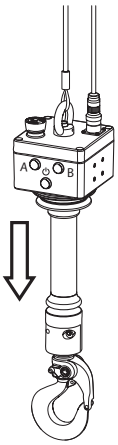

Handle Connection

1. Connect the handle eye bolt to the wire rope eyelet.
2. Connect the electric spiral wire to the electronic box.
3. Connect the electric spiral wire to the plug on the top of the handle.
4. Tighten the ring clockwise for a secure connection.

Fig. D

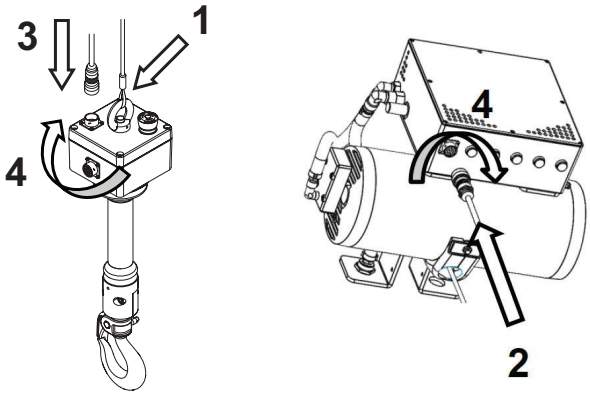

Turn ON Power

5. Switch ON the controls using the power switch on the main box.
   a. To disengage the operation, press the Emergency Stop Button located on the top of the handle.
6. Do not touch the control handle during initialization of the controller kit.
7. Release the Emergency Stop Button by rotating clockwise until it pops.
8. Push the power button (green) on the handle to begin operation.

Fig. E

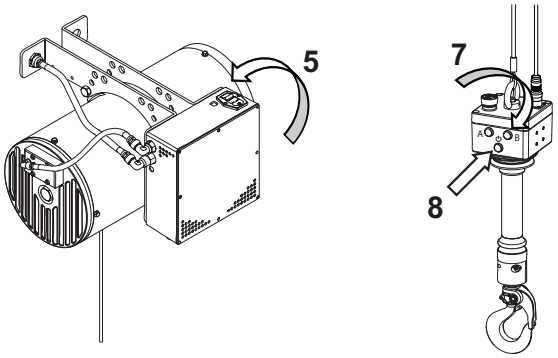

Deflate the Chamber

9. Three yellow lights indicate completion of initialization of the controller. When lit, pull down sleeve of the handle to deflate the chamber.

Fig. F

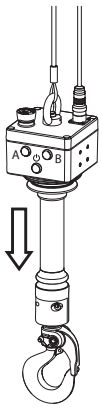

Operation

1. Press Emergency Stop button to stop movement in case of an emergency.
2. Make sure electrical wiring to the ZG balancer conforms to all relevant safety codes and regulations.
3. Make sure all electrical connections are secure before applying power.

WARNING

- **Before performing maintenance, securely tag the controls with a warning label stating: 'WARNING - DO NOT OPERATE - EQUIPMENT BEING REPAIRED'.**

Standard Operation

Red light stays ON for two seconds immediately after powering up the ZG balancer. During this time, load cell and the handle sensor resting values are calculated by the controller. When the red light turns OFF, the ZG balancer is ready for operation. If the resting values of the handle and load cell sensors are out of expected range, red light flashes rapidly. During this state, the ZG balancer is not able to operate.

Fig. G

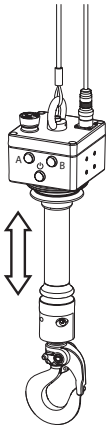

Float Mode

Engage Float Mode

To engage float mode, release the handle. Float mode will be triggered by lack of contact with the handle. While float mode is engaging, red light will appear on the ZG balancer. Do not touch the handle while the controller is calculating load. Float mode is engaged and calculation completes when three yellow lights appear on the controller.

Do not apply force on the load (upward/downward) while float mode is calculating as this will cause faulty calculation of the weight and drift of the load.

Move loads up and down by acting direclty on the load itself.

Disengage Float Mode

Float mode disengages automatically once the handle is touched resulting in yellow lights on the controller to turn OFF. When yellow lights turn OFF, use the handle sleeve to move load upward/downward.

Configuration Tool

This is a windows application which communicates with the controller over USB serial port and helps the user to change settings and enable/disable the ZG balancer features.

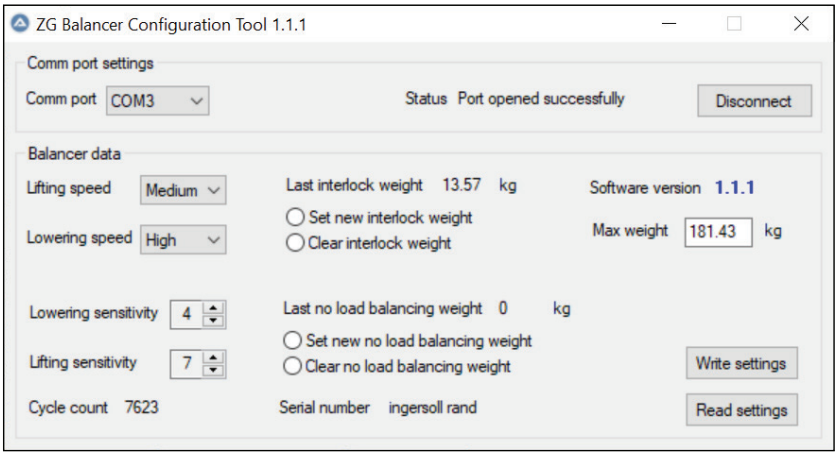

Steps to be followed for using Configuration Tool

- Turn ON the ZG balancer and wait for the red light to turn OFF.
- Connect the controller to laptop using a USB cable.
- Run the configuration tool by double clicking its executable file.
- Select the communication/serial port number from the drop down box of the configuration tool.
- Click on the connect button. Tool will read data from the controller and present the last stored data in the controller.

When there is a communication loss between the controller and the configuration tool, a dialog box pops up as shown below:

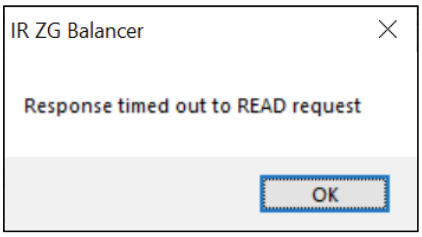

If above message is frequently reported by the tool, restart communication by power cycling the controller. Unplug the USB cable and restart the configuration tool.

Cycle Count

This counter indicates how many times a load weighing more than 10 kg is lifted in air and lowered to ground. Cycle count is incremented when the load on the handle becomes less than or equal to the handle weight after lifting approximately 10 kg load.

No Load Balancing

Set the no load balancing if a handling device is permanently suspended to the unit. This will keep the handling device balanced in float mode and help to prevent damaging the part during loading/unloading.

The set value is the minimum weight limit the ZG balancer will handle. When the weight on the handle goes below no load balancing limit then red light flashes rapidly and downward movement of load is disabled. During this stage, only lifting operation must be performed.

Steps to Enable/Disable No Load Balancing

- Using the handle mode, lift the handling device or gripper load to a height where it is clearly suspended in air.
- Connect the controller to laptop with a USB cable.
- Run the configuration tool.
- To enable no load balancing feature, click the option “Set new no load balancing weight”, and save this setting to the controller by clicking on “Write settings“ button. Configuration tool will indicate the status of write operation with a write successful message box.

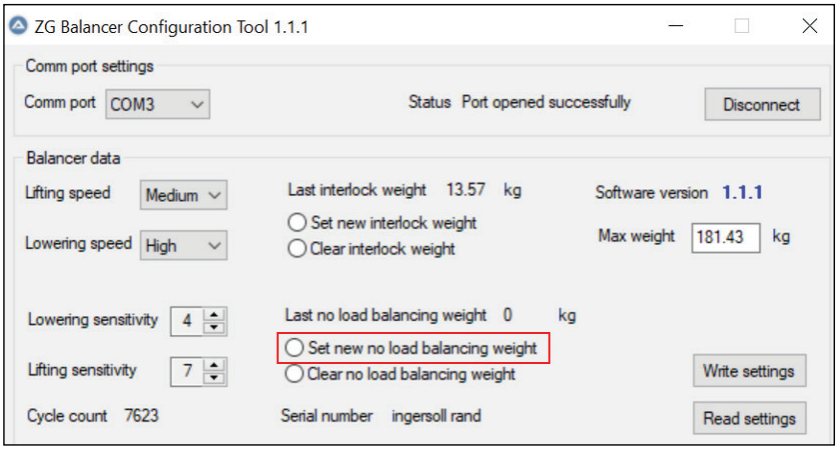

- No load balancing weight measured by the controller is displayed in configuration tool.

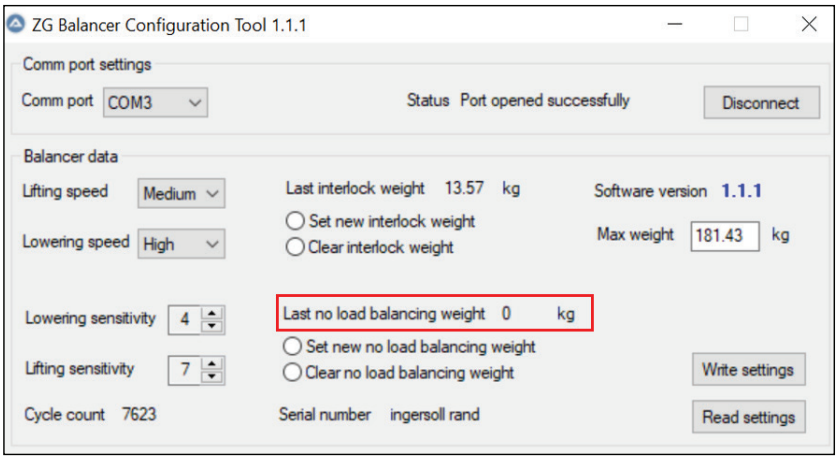

- This completes the enable no load balancing setup.
- To disable no load balancing feature, click the option “Clear no load balancing weight”, and save this setting by clicking on “Write settings“ button. Last, no load balancing weight will be set to zero.

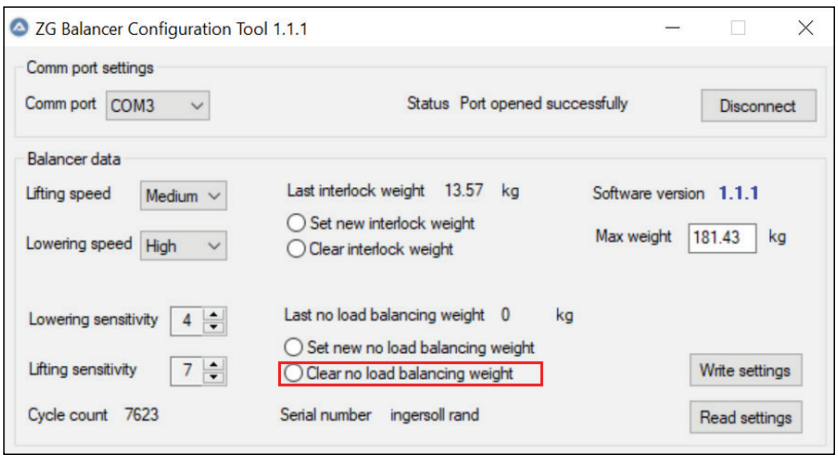

- When the settings are saved successfully in the controller, configuration tool notifies the user with message box as shown below:

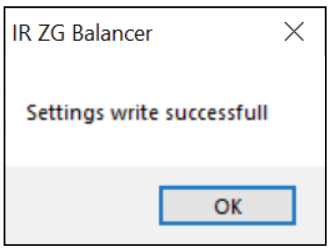

Interlock

The interlock feature will not allow the handling device to open while it is suspended. This feature can be enabled using the configuration tool. Once enabled, the yellow lights indicate the user the state of interlocking operation as below:

- Yellow light1, indicates that the part is clamped.
- Yellow light2, indicates that the part is released.
- Yellow light3, indicates that the part is ready to be removed from the controller and load is no longer supported.

Note: Yellow lights status indication for float mode ready is not available when interlocking is enabled.

Steps to Enable/Disable Interlocking

- Using the handle mode, lift the handling device or gripper load to a height where it is clearly suspended in air.
- Connect the controller to laptop with a USB cable.
- Run the configuration tool.
- To enable no interlocking feature, click the option "Set new interlock weight", and save this setting to the controller by clicking on "Write settings" button. Configuration tool will indicate the status of write operation with a write successful message box.

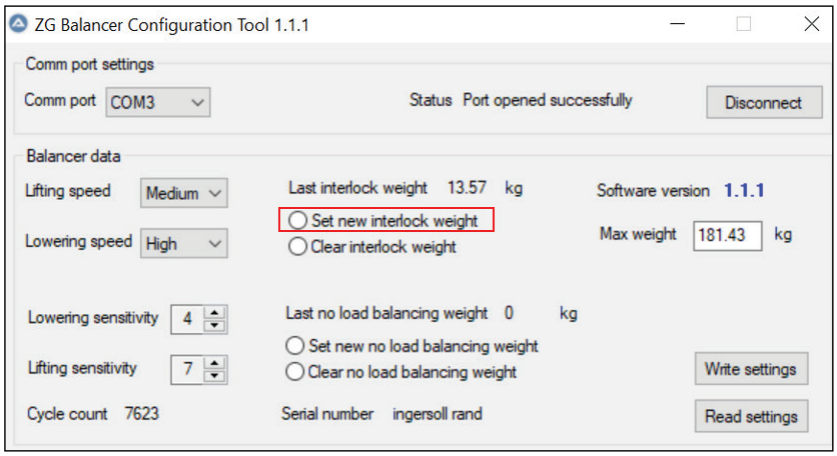

- This completes the enable interlocking feature setup.
- To disable no interlock feature, click the option "Clear interlock weight" and save this setting by clicking on "Write settings" button. Last, interlock weight will be set to zero.

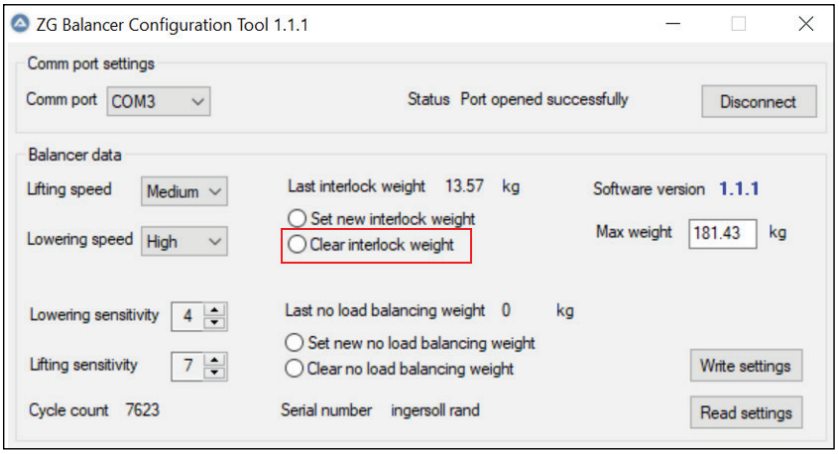

- When the settings are saved successfully in the controller, configuration tool notifies the user with message box as shown below:

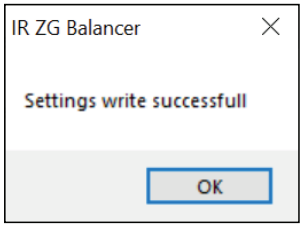

Note: The controller does not allow to disable/clear previously set interlock weight when the load weight measured by the controller is more than the handle weight. Make sure to clear last interlock weight, the handling device should be lowered fully to the ground. Configuration tool displays below message box when interlock disable is attempted while the load is still suspended in air.

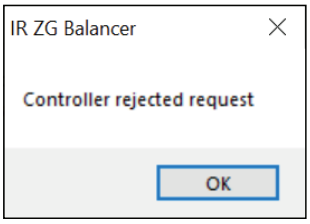

Max Weight/Over Pressure

Controlled pressure within the chamber will prevent fast upward movement if there is a blockage of the load or gripper, or sudden release of the load. Use this feature to prevent from such occurrence or limit the ZG balancer capacity. Use this field in configuration tool to set the maximum weight.

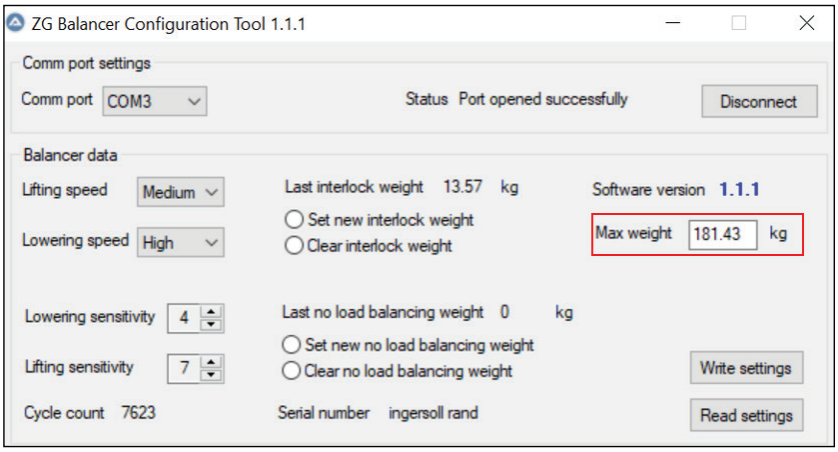

Make sure to enter the load value in the controller less than 80% of the ZG balancer capacity. Else, the controller will reject the request. During lifting operation, the controller allows the weight of the load to exceed the set limit by approximately 5 kg.

If the controller reads a weight more than the set maximum weight then upward movement is stopped and red light flashes rapidly. During this stage, only downward movement is allowed.

Speed Settings

Speed settings are calibrated in factory for different weight ranges and different ZG balancer capacities. The default factory setting is set to medium speed. A different speed setting can be programmed separately for lowering and lifting by selecting Low/Medium/High from the respective drop down boxes. Save the settings by clicking on the "Write settings" button.

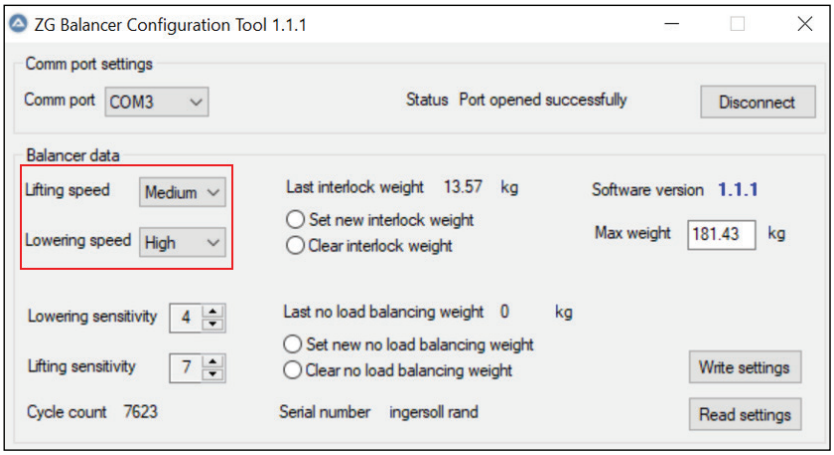

Sensitivity Control Settings

Sensitivity Control settings are related to float mode operation only. Effort required to move the load by directly applying force on the load is more when the sensitivity number is high and vice-versa.

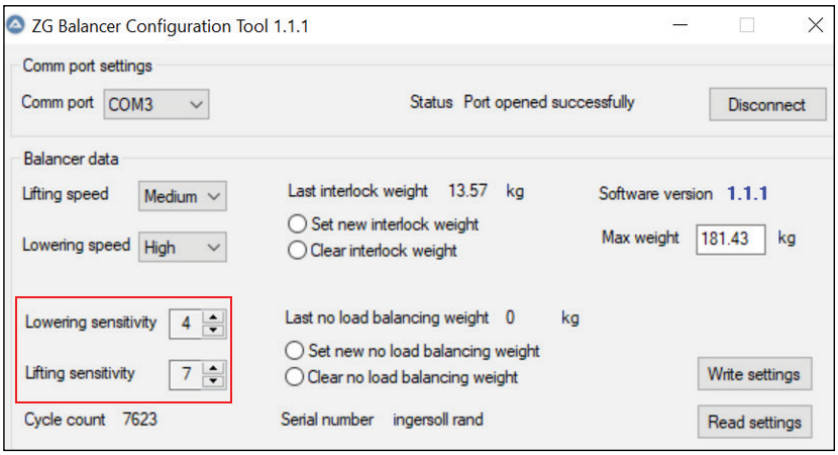

Interlock Wiring

The interlock activates an available output on the I/O plug at the back of the handle.

Connect the handling device to the controller as follow:

- Pin J and K: Clamp control actuator.
- Pin J and L: Release control actuator.
- Pin J and M: Ready to release information.

Use release button (blue) on the controller handle to activate clamping action. Pull down the sliding part of the handle (bimanual action).

Use orange button on the controller handle to activate release action. Pull down the sliding part of the handle (bimanual action).

Orange and blue buttons must be wired outside of the handle sleeve using connection pins.

- Pin C and F: Additional clamp push button (NO contact).
- Pin C and G: Additional release push button (NO contact).

Schematics

Fig. H

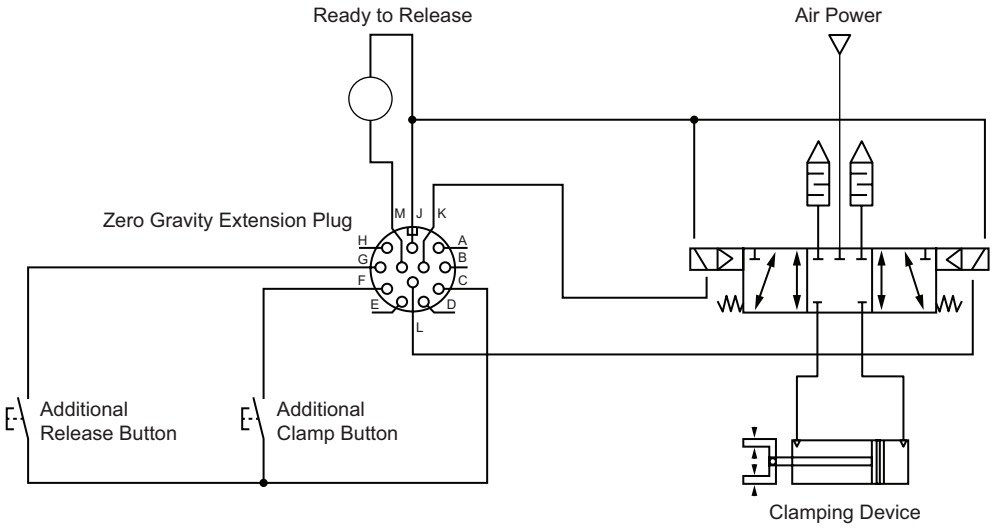

Extension Plug Pinout

Pin	Function
A	Not used
B	Not used
C	Ground
D	+5 V for input
E	Additional force sensor input
F	Additional clamp button input
G	Additional release button input
H	Input 4
J	+12 V for output
K	Clamping output
L	Release output
M	Ready to release output

Input/Output Hardware

Kit ZGB00-I/O is required to connect to extension plug. Contact your service or sales representative for availability.

To activate, input switch unit to ground; to deactivate, input switch unit to +5 V DC or open wire.

To activate the controller, output switch output pin to ground. Output power supply voltage is 12 V DC. Do not exceed total of 3A.

Zero Gravity Handle Review

Refer to Fig. J.

Fig. J

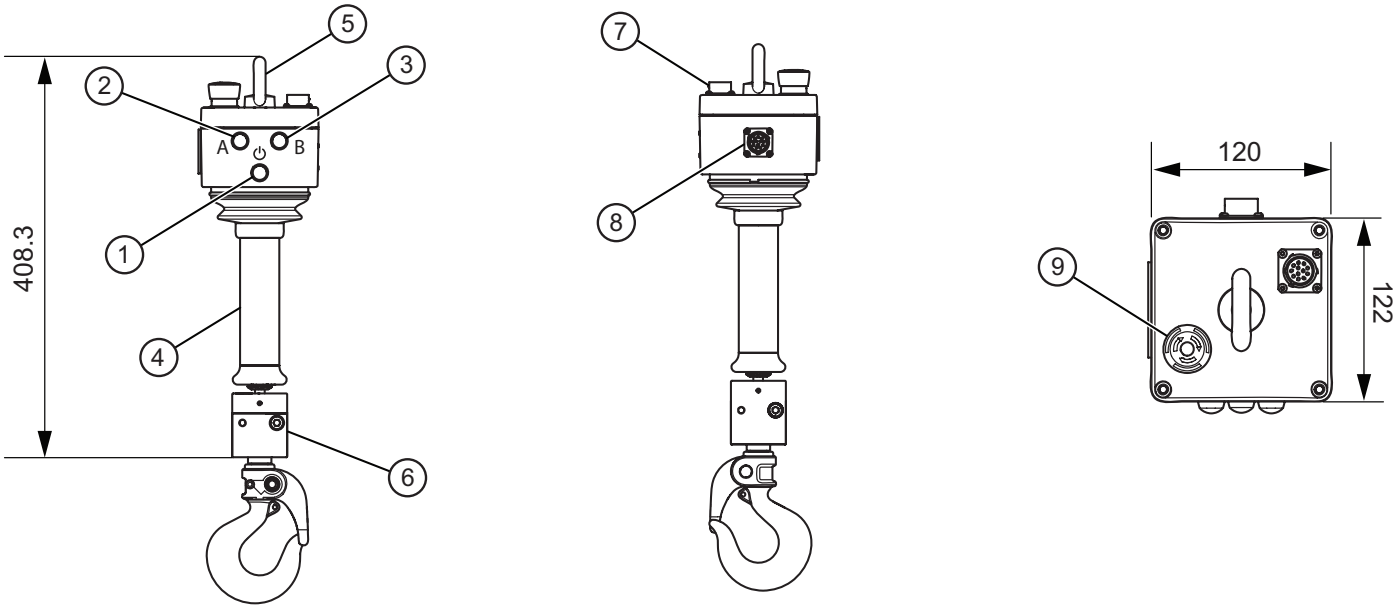

Item Number	Part Description
1	Power Button (green)
2	De-Clamp Button (orange)
3	Clamp Button (blue)
4	Handle Sleeve
5	Top Eyelet
6	Bottom Hook Block
7	Main Plug: to Zero Gravity Control Box
8	Extension Plug: Connection to Input or Output
9	Emergency Stop

Zero Gravity Control Box Review

Refer to Fig. K.

Fig. K

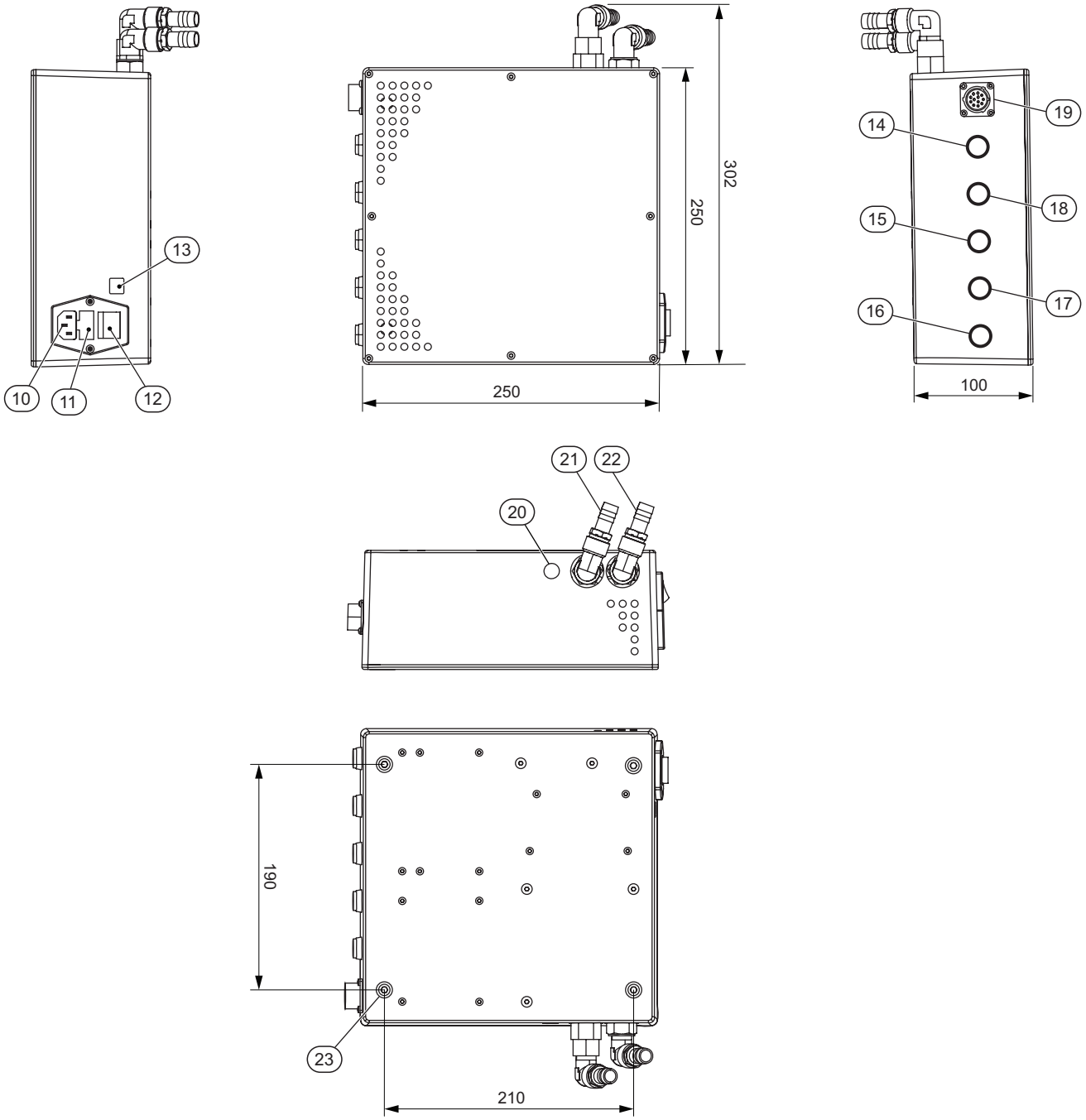

Item Number	Part Description
10	Power Supply 85-250 V AC
11	Fuse
12	Power Switch
13	USB Connection
14	Power ON Indicator Light
15	Balancing Mode or Part Released Indicator Light
16	Error Indicator Light
17	Balancing Mode or Ready to Release Signal Indicator Light
18	Balancing Mode or Part Clamped Indicator Light
19	Main Plug: to Zero Gravity Handle
20	Muffler
21	Air Supply Port Fitting
22	Balancer Hose Port Fitting
23	Mounting Hole 4xM6

Software Communication Section

Reload Internal Software of the Zero Gravity

- Visit **Ingersoll Rand** MH support website.
- Download the respective .hex file based on the balancer capacity.
- Download the GUI tool service and GUI tool field.
- Store the files in the local drive.

Software .HEX file for Zero Gravity Gen-2.0

150lbs ZG-Balancer	*Link: 150lbs ZG-Balancer-Rev A*
200lbs ZG-Balancer	*Link: 200lbs ZG-Balancer-Rev A*
350lbs ZG-Balancer	*Link: 350lbs ZG-Balancer-Rev A*
500lbs ZG-Balancer	*Link: 500lbs ZG-Balancer-Rev A*

Link to GUI tool for Service and Troubleshooting: GUI tool service-Rev A

Link to GUI tool used at Field: GUI tool Field-Rev A

Note: Windows 10 OS is recommended.

How to load the software

- Four .hex files are created based on the capacity of the ZG balancer.

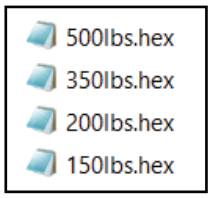

- Store the .hex file in a new folder in the local drive.

Note: Do not add space or special character in naming the folder name.

- Connect the USB cable from control box to the system and open the GUI tool.

Note: Do not click on the connect button in GUI tool.

- Select the "Comm port".
- Click on "Software update" button.

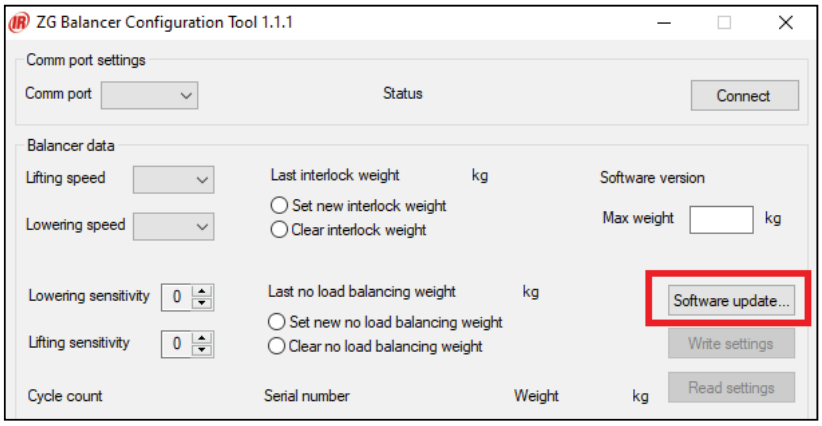

- Go to the folder where .hex file is stored and double click on the .hex file based on the capacity intended to load.

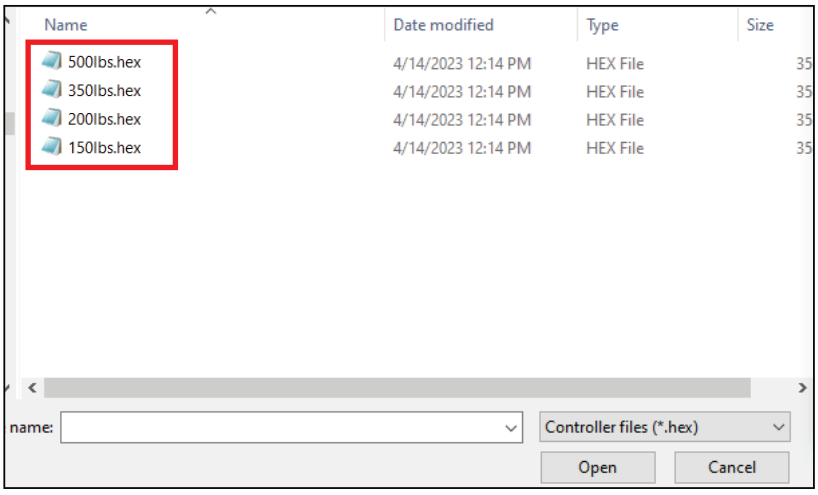

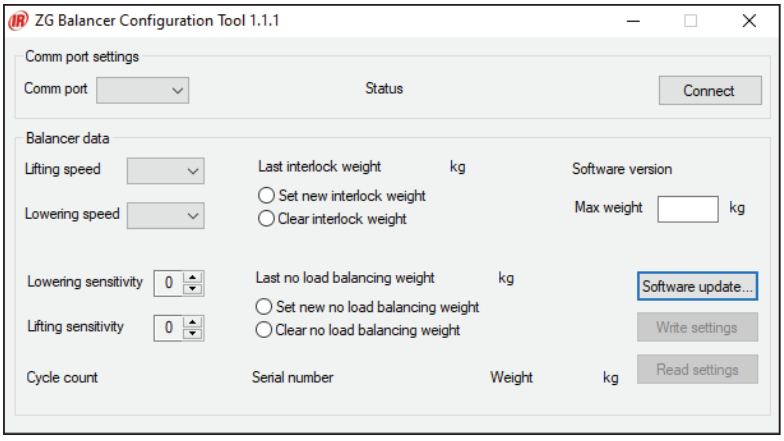

- A message pops out on the screen as in image below:

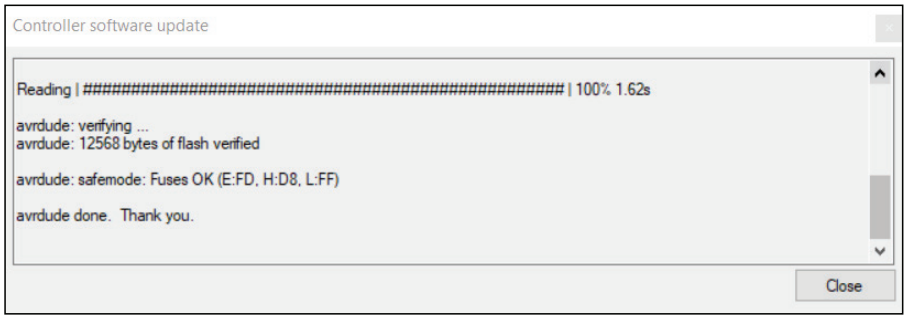

Note:

a. The software is loaded in the control box.

b. Always remove the USB cable from the computer and restart the ZG balancer.

Maintenance

Electronics

Steady red light on the controller box indicates run error. Restart system to troubleshoot errors. If problem recurs, system will switch to safe mode and red light remains constant.
Conduct yearly system check to prevent drifting of the sensor.

Spiral/Electric Wire

Inspect electric wires daily. Make sure all electric wires are free of rust, dirt, water, oil, and any damage to insulation or plug. Replace spiral wire yearly.

Wire Rope

Do not yard wire rope more than 10 degrees from vertical center of wire rope guide. Excessive yarding will cause increased wear on the ZG balancer and decrease the life of the components. Replace wire rope if frayed, kinked, or bird caging is visible.

Refer to the Product Maintenance Manual.

Fig. L

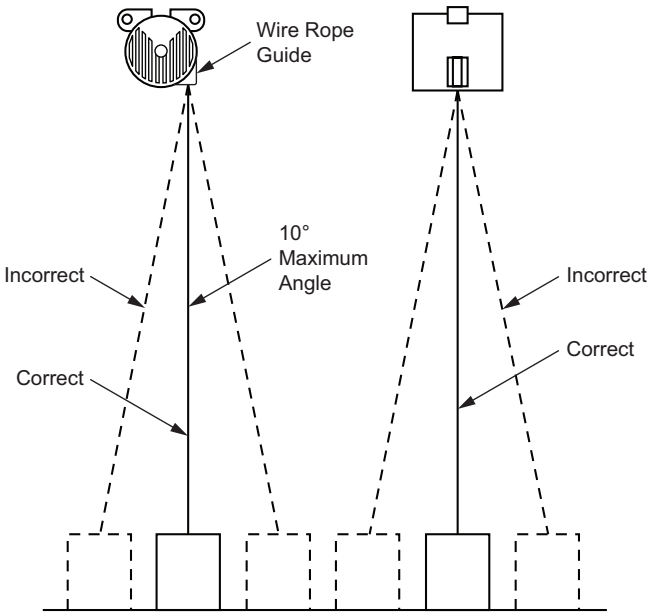

Maintenance Schedule

Disconnect the power supply before working on the equipment. The unit must be repaired by qualified personnel, risk of electric shock.

Component	Inspection	Criteria for operation	Daily	Frequent (6 months)	Periodic (1 year)
Spiral Wire	Damages	No visible damage on entire length or on plugs.	X	X	X
	Kinks	No visible kinks on entire length.	X	X	X
Power Cord	Damages	No visible damage on entire length or on plugs.	X	X	X
	Kinks	No visible kinks on entire length.	X	X	X
Control Box	Valves leaks	Load doesn't move when the system is switched OFF.		X	X
	Pressure sensor damages	Balancing mode operational.		X	X
Command Handle	Force sensor damage	Load doesn't move when handle is free and power ON.	X	X	X
	Gap between sensitive area and handle	No resistance in motion, only axial motion must be possible.			X
	Emergency stop	Good operation of this part.	X	X	X
	Control buttons	No visible looseness, or sticking of buttons.	X	X	X

Troubleshooting

1. Load is not moving up and down.

- Check for the leakages at fitting by using soap bubble test. Check for the leakages at the yellow and black pipe fitting.
- Observe for leakage noise.
- If the load is still not moving up and down then open the control box. Remove the solenoid valves, exhaust valve (D1, D2 and D3) and inlet valve (M1, M2 and M3) and clean it. Fit the valves again in the same position.

2. Red light is blinking in the Control Box for more than 10 seconds after initiation or green button is turned ON.

- This is an indication of the Force sensor in the handle ADC value is not in limit or the Force sensor in the handle is out of range.
- Connect the control box to the system and open the GUI tool. Check for the Force sensor ADC value and make sure the value is 512+/-40.

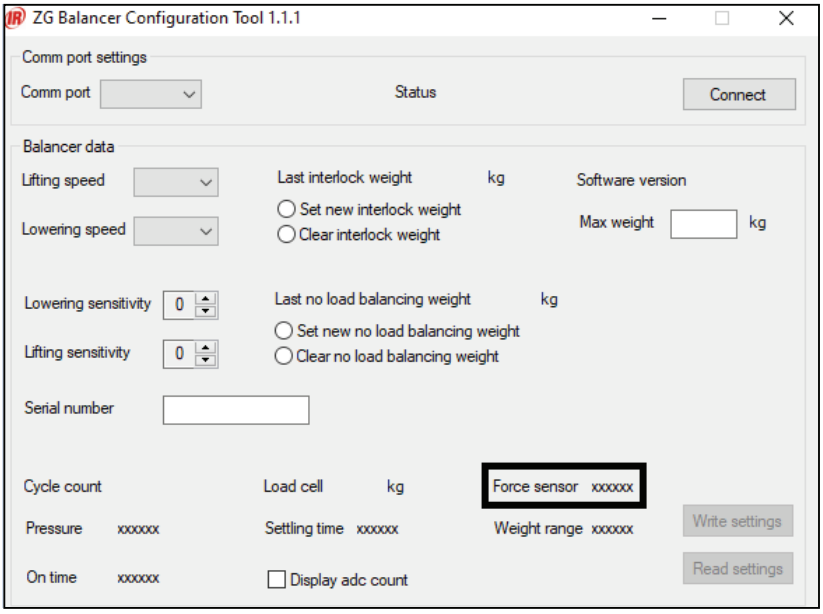

- If any deviation in factory setting values, please contact nearest **Ingersoll Rand** office.

3. Load is not moving in up direction but moving in down position.

- This is a clear indication of the Max weight concept.
- Red light starts blinking when load is moved up in the control box.
- Connect the control box to the system and open the GUI tool. Check the weight of the load and change the Max value in the Max weight box according to load to be lifted.

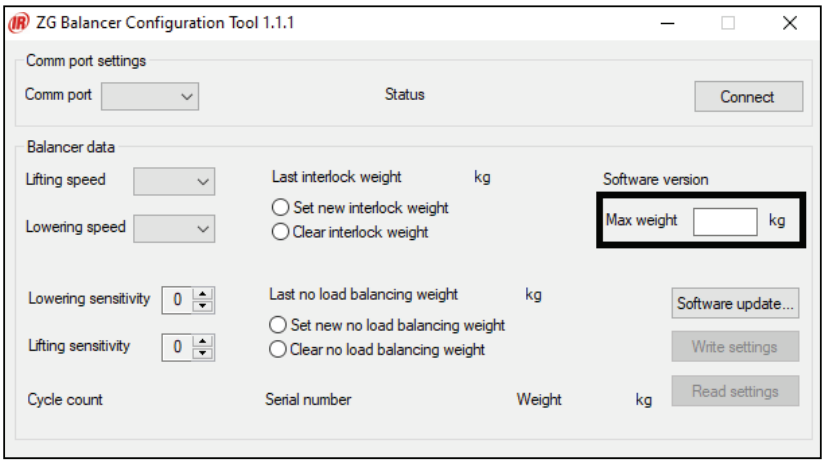

Note: Max weight must not exceed 80% of the ZG balancer capacity.

4. Load is moving up and down but sometimes it's a jerky motion or not working or a red light is blinking in the Control Box.

- This will occur when the operator is moving the load in the handle mode up and down in faster rate.
- This will cause the ADC value in load cell reaching more than Max weight. Hence a red light will blink not allowing the system to go up.
- This is a concept intentionality included in the system to avoid incorrect usage of the ZG balancer.
- In such case, get the load down, turn OFF the system for 10 seconds and turn ON/press the green button. Then operate the handle gently.

5. Load is on the ground but the handle is not moving further down.

- This is an indication of interlock or load balancing.
- In such case, connect the control box to system and open GUI tool.
- If any value is displayed on the last interlock weight or last no load balancing weight, clear it by ticking the box and press on "Write settings" to update in system.

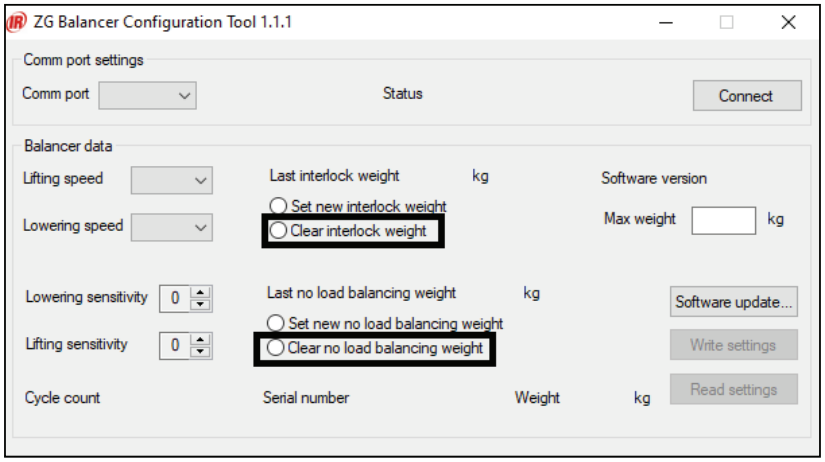

Zero Gravity Balancer 2.0 (Bullard Hook) - Parts List

Model Driver	Description	Suspension	Balancer	Kit	Prop 65 Label
ZG2W01508000B	Zero Gravity Balancer, 150 LBS, No Suspension Kit, Bullard Hook	ZGS00	BW015080	ZG2015B-KIT	47645393001
ZG2W015080A1B	Zero Gravity Balancer, 150 LBS, ZRA1 Mount, Bullard Hook	ZGSA1-150			
ZG2W015080A2B	Zero Gravity Balancer, 150 LBS, ZRA2 Mount, Bullard Hook	ZGSA2-150			
ZG2W015080ATB	Zero Gravity Balancer, 150 LBS, ZRAT Mount, Bullard Hook	ZGSAT-150			
ZG2W015080HMB	Zero Gravity Balancer, 150 LBS, Hook Mount, Bullard Hook	ZGSHM-150			
ZG2W015080S2B	Zero Gravity Balancer, 150 LBS, ZRS2 Mount, Bullard Hook	ZGSS2-150			
ZG2W02012000B	Zero Gravity Balancer, 200 LBS, No Suspension Kit, Bullard Hook	ZGS00	BW020120	ZG2020B-KIT	
ZG2W020120A1B	Zero Gravity Balancer, 200 LBS, ZRA1 Mount, Bullard Hook	ZGSA1			
ZG2W020120A2B	Zero Gravity Balancer, 200 LBS, ZRA2 Mount, Bullard Hook	ZGSA2			
ZG2W020120ATB	Zero Gravity Balancer, 200 LBS, ZRAT Mount, Bullard Hook	ZGSAT			
ZG2W020120HMB	Zero Gravity Balancer, 200 LBS, Hook Mount, Bullard Hook	ZGSHM			
ZG2W020120S2B	Zero Gravity Balancer, 200 LBS, ZRS2 Mount, Bullard Hook	ZGSS2			
ZG2W020120S00B	Zero Gravity Balancer, 200 LBS, No Suspension Kit, Z-Stop, Bullard Hook	ZGS00	BW020120S		
ZG2W020120SA1B	Zero Gravity Balancer, 200 LBS, ZRA1 Mount, Z-Stop, Bullard Hook	ZGSA1			
ZG2W020120SA2B	Zero Gravity Balancer, 200 LBS, ZRA2 Mount, Z-Stop, Bullard Hook	ZGSA2			
ZG2W020120SATB	Zero Gravity Balancer, 200 LBS, ZRAT Mount, Z-Stop, Bullard Hook	ZGSAT			
ZG2W020120SHMB	Zero Gravity Balancer, 200 LBS, Hook Mount, Z-Stop, Bullard Hook	ZGSHM			
ZG2W020120SS2B	Zero Gravity Balancer, 200 LBS, ZRS2 Mount, Z-Stop, Bullard Hook	ZGSS2			
ZG2W03508000B	Zero Gravity Balancer, 350 LBS, No Suspension Kit, Bullard Hook	ZGS00	BW035080	ZG2035B-KIT	
ZG2W035080A1B	Zero Gravity Balancer, 350 LBS, ZRA1 Mount, Bullard Hook	ZGSA1			
ZG2W035080A2B	Zero Gravity Balancer, 350 LBS, ZRA2 Mount, Bullard Hook	ZGSA2			
ZG2W035080ATB	Zero Gravity Balancer, 350 LBS, ZRAT Mount, Bullard Hook	ZGSAT			
ZG2W035080HMB	Zero Gravity Balancer, 350 LBS, Hook Mount, Bullard Hook	ZGSHM			
ZG2W035080S2B	Zero Gravity Balancer, 350 LBS, ZRS2 Mount, Bullard Hook	ZGSS2			
ZG2W035080S00B	Zero Gravity Balancer, 350 LBS, No Suspension Kit, Z-Stop, Bullard Hook	ZGS00	BW032080S		
ZG2W035080SA1B	Zero Gravity Balancer, 350 LBS, ZRA1 Mount, Z-Stop, Bullard Hook	ZGSA1			
ZG2W035080SA2B	Zero Gravity Balancer, 350 LBS, ZRA2 Mount, Z-Stop, Bullard Hook	ZGSA2			
ZG2W035080SATB	Zero Gravity Balancer, 350 LBS, ZRAT Mount, Z-Stop, Bullard Hook	ZGSAT			
ZG2W035080SHMB	Zero Gravity Balancer, 350 LBS, Hook Mount, Z-Stop, Bullard Hook	ZGSHM			
ZG2W035080SS2B	Zero Gravity Balancer, 350 LBS, ZRS2 Mount, Z-Stop, Bullard Hook	ZGSS2			

Model Driver	Description	Suspension	Balancer	Kit	Prop 65 Label
ZG2W05008000B	Zero Gravity Balancer, 500 LBS, No Suspension Kit, Bullard Hook	ZGS00	BW050080	ZG2050B-KIT	47645393001
ZG2W050080A1B	Zero Gravity Balancer, 500 LBS, ZRA1 Mount, Bullard Hook	ZGSA1			
ZG2W050080A2B	Zero Gravity Balancer, 500 LBS, ZRA2 Mount, Bullard Hook	ZGSA2			
ZG2W050080ATB	Zero Gravity Balancer, 500 LBS, ZRAT Mount, Bullard Hook	ZGSAT			
ZG2W050080HMB	Zero Gravity Balancer, 500 LBS, Hook Mount, Bullard Hook	ZGSHM			
ZG2W050080S2B	Zero Gravity Balancer, 500 LBS, ZRS2 Mount, Bullard Hook	ZGSS2			
ZG2W050080S00B	Zero Gravity Balancer, 500 LBS, No Suspension Kit, Z-Stop, Bullard Hook	ZGS00	BW050080S		
ZG2W050080SA1B	Zero Gravity Balancer, 500 LBS, ZRA1 Mount, Z-Stop, Bullard Hook	ZGSA1			
ZG2W050080SA2B	Zero Gravity Balancer, 500 LBS, ZRA2 Mount, Z-Stop, Bullard Hook	ZGSA2			
ZG2W050080SATB	Zero Gravity Balancer, 500 LBS, ZRAT Mount, Z-Stop, Bullard Hook	ZGSAT			
ZG2W050080SHMB	Zero Gravity Balancer, 500 LBS, Hook Mount, Z-Stop, Bullard Hook	ZGSHM			
ZG2W050080SS2B	Zero Gravity Balancer, 500 LBS, ZRS2 Mount, Z-Stop, Bullard Hook	ZGSS2			

Zero Gravity Balancer 2.0 (Snap Hook) - Parts List

Model Driver	Description	Suspension	Balancer	Kit	Prop 65 Label
ZG2W01508000C	Zero Gravity Balancer, 150 LBS, No Suspension Kit, Snap Hook	ZGS00	BW015080	ZG2015C-KIT	47645393001
ZG2W015080A1C	Zero Gravity Balancer, 150 LBS, ZRA1 Mount, Snap Hook	ZGSA1-150			
ZG2W015080A2C	Zero Gravity Balancer, 150 LBS, ZRA2 Mount, Snap Hook	ZGSA2-150			
ZG2W015080ATC	Zero Gravity Balancer, 150 LBS, ZRAT Mount, Snap Hook	ZGSAT-150			
ZG2W015080HMC	Zero Gravity Balancer, 150 LBS, Hook Mount, Snap Hook	ZGSHM-150			
ZG2W015080S2C	Zero Gravity Balancer, 150 LBS, ZRS2 Mount, Snap Hook	ZGSS2-150			
ZG2W02012000C	Zero Gravity Balancer, 200 LBS, No Suspension Kit, Snap Hook	ZGS00	BW020120	ZG2020C-KIT	
ZG2W020120A1C	Zero Gravity Balancer, 200 LBS, ZRA1 Mount, Snap Hook	ZGSA1			
ZG2W020120A2C	Zero Gravity Balancer, 200 LBS, ZRA2 Mount, Snap Hook	ZGSA2			
ZG2W020120ATC	Zero Gravity Balancer, 200 LBS, ZRAT Mount, Snap Hook	ZGSAT			
ZG2W020120HMC	Zero Gravity Balancer, 200 LBS, Hook Mount, Snap Hook	ZGSHM			
ZG2W020120S2C	Zero Gravity Balancer, 200 LBS, ZRS2 Mount, Snap Hook	ZGSS2			
ZG2W020120S00C	Zero Gravity Balancer, 200 LBS, No Suspension Kit, Z-Stop, Snap Hook	ZGS00	BW020120S		
ZG2W020120SA1C	Zero Gravity Balancer, 200 LBS, ZRA1 Mount, Z-Stop, Snap Hook	ZGSA1			
ZG2W020120SA2C	Zero Gravity Balancer, 200 LBS, ZRA2 Mount, Z-Stop, Snap Hook	ZGSA2			
ZG2W020120SATC	Zero Gravity Balancer, 200 LBS, ZRAT Mount, Z-Stop, Snap Hook	ZGSAT			
ZG2W020120SHMC	Zero Gravity Balancer, 200 LBS, Hook Mount, Z-Stop, Snap Hook	ZGSHM			
ZG2W020120SS2C	Zero Gravity Balancer, 200 LBS, ZRS2 Mount, Z-Stop, Snap Hook	ZGSS2			

Model Driver	Description	Suspension	Balancer	Kit	Prop 65 Label
ZG2W03508000C	Zero Gravity Balancer, 350 LBS, No Suspension Kit, Snap Hook	ZGS00	BW035080	ZG2035C-KIT	47645393001
ZG2W035080A1C	Zero Gravity Balancer, 350 LBS, ZRA1 Mount, Snap Hook	ZGSA1			
ZG2W035080A2C	Zero Gravity Balancer, 350 LBS, ZRA2 Mount, Snap Hook	ZGSA2			
ZG2W035080ATC	Zero Gravity Balancer, 350 LBS, ZRAT Mount, Snap Hook	ZGSAT			
ZG2W035080HMC	Zero Gravity Balancer, 350 LBS, Hook Mount, Snap Hook	ZGSHM			
ZG2W035080S2C	Zero Gravity Balancer, 350 LBS, ZRS2 Mount, Snap Hook	ZGSS2			
ZG2W035080S00C	Zero Gravity Balancer, 350 LBS, No Suspension Kit, Z-Stop, Snap Hook	ZGS00	BW032080S		
ZG2W035080SA1C	Zero Gravity Balancer, 350 LBS, ZRA1 Mount, Z-Stop, Snap Hook	ZGSA1			
ZG2W035080SA2C	Zero Gravity Balancer, 350 LBS, ZRA2 Mount, Z-Stop, Snap Hook	ZGSA2			
ZG2W035080SATC	Zero Gravity Balancer, 350 LBS, ZRAT Mount, Z-Stop, Snap Hook	ZGSAT			
ZG2W035080SHMC	Zero Gravity Balancer, 350 LBS, Hook Mount, Z-Stop, Snap Hook	ZGSHM			
ZG2W035080SS2C	Zero Gravity Balancer, 350 LBS, ZRS2 Mount, Z-Stop, Snap Hook	ZGSS2			
ZG2W05008000C	Zero Gravity Balancer, 500 LBS, No Suspension Kit, Snap Hook	ZGS00	BW050080	ZG2050C-KIT	
ZG2W050080A1C	Zero Gravity Balancer, 500 LBS, ZRA1 Mount, Snap Hook	ZGSA1			
ZG2W050080A2C	Zero Gravity Balancer, 500 LBS, ZRA2 Mount, Snap Hook	ZGSA2			
ZG2W050080ATC	Zero Gravity Balancer, 500 LBS, ZRAT Mount, Snap Hook	ZGSAT			
ZG2W050080HMC	Zero Gravity Balancer, 500 LBS, Hook Mount, Snap Hook	ZGSHM			
ZG2W050080S2C	Zero Gravity Balancer, 500 LBS, ZRS2 Mount, Snap Hook	ZGSS2			
ZG2W050080S00C	Zero Gravity Balancer, 500 LBS, No Suspension Kit, Z-Stop, Snap Hook	ZGS00	BW050080S		
ZG2W050080SA1C	Zero Gravity Balancer, 500 LBS, ZRA1 Mount, Z-Stop, Snap Hook	ZGSA1			
ZG2W050080SA2C	Zero Gravity Balancer, 500 LBS, ZRA2 Mount, Z-Stop, Snap Hook	ZGSA2			
ZG2W050080SATC	Zero Gravity Balancer, 500 LBS, ZRAT Mount, Z-Stop, Snap Hook	ZGSAT			
ZG2W050080SHMC	Zero Gravity Balancer, 500 LBS, Hook Mount, Z-Stop, Snap Hook	ZGSHM			
ZG2W050080SS2C	Zero Gravity Balancer, 500 LBS, ZRS2 Mount, Z-Stop, Snap Hook	ZGSS2			

Model Code Explanation - Kit Parts

Example: **ZG 2 015 B -KIT**

Type of Control Kit

ZG = Zero Gravity

2 = Gen 2.0

Capacity

015 = 150 lb. (68 kg)
020 = 200 lb. (91 kg)
035 = 350 lb. (158 kg)
050 = 500 lb. (227 kg)

Type of Hook

B = Bullard
C = Steel Snap

Zero Gravity Balancer 2.0 - Kit List

Model Driver	Description	Balancer Brackets	Control Box	Handle	Spiral Wire	Manuals	Warning Label
ZG2015B-KIT	ZG Gen 2 Kit for 150 LBS Balancer with Bullard Hook	ZGE06 (47563439001)	ZGB015 (47565285001)	47808627001	ZGC2 (47563687001)	47804819001 47804820001 47808318001	47822128001 56740962
ZG2015C-KIT	ZG Gen 2 Kit for 150 LBS Balancer with Steel Snap Hook			47805074001			
ZG2020B-KIT	ZG Gen 2 Kit for 200 LBS Balancer with Bullard Hook	ZGE10 (47565321001)	ZGB020 (47565286001)	47808627001			
ZG2020C-KIT	ZG Gen 2 Kit for 200 LBS Balancer with Steel Snap Hook			47805074001			
ZG2035B-KIT	ZG Gen 2 Kit for 350 LBS Balancer with Bullard Hook		ZGB035 (47565287001)	47808627001			
ZG2035C-KIT	ZG Gen 2 Kit for 350 LBS Balancer with Steel Snap Hook			47805074001			
ZG2050B-KIT	ZG Gen 2 Kit for 500 LBS Balancer with Bullard Hook		ZGB050 (47563687001)	47808627001			
ZG2050C-KIT	ZG Gen 2 Kit for 500 LBS Balancer with Steel Snap Hook			47805074001			

Controller Box - Exploded View

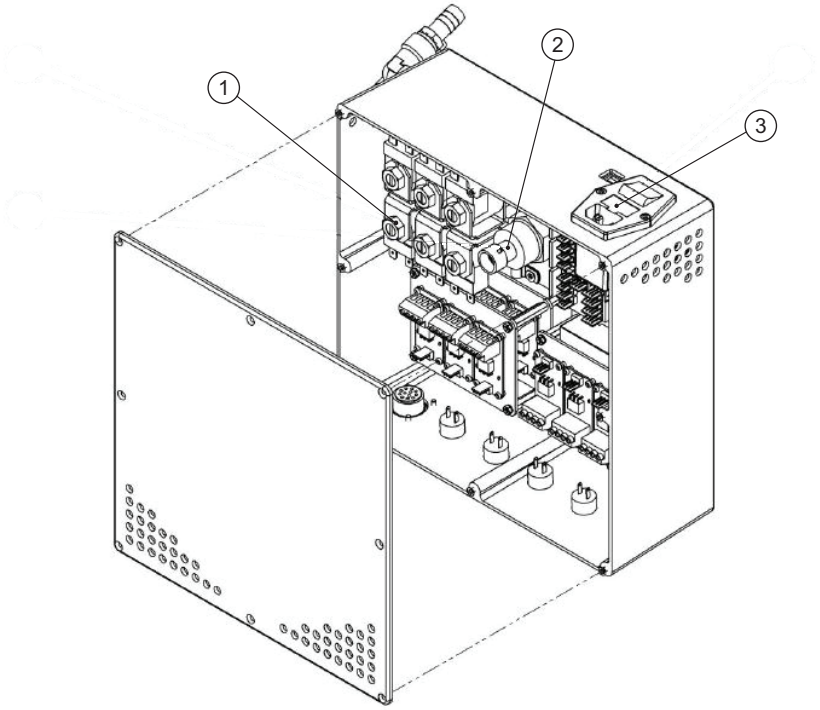

Controller Box - Parts List

Item	Part Description	Quantity	Part Number (CCN)
1	Set of Valve for FSB015	1	(47563675001)
	Set of Valve for FSB020	1	(47563676001)
	Set of Valve for FSB035	1	(47563677001)
	Set of Valve for FSB050	1	(47563678001)
2	Pressure Sensor	1	ZHSEA0080 (04709614)
3	Fuses	2	(47738840001)

Zero Gravity Command Handle Gen 2 - Exploded View

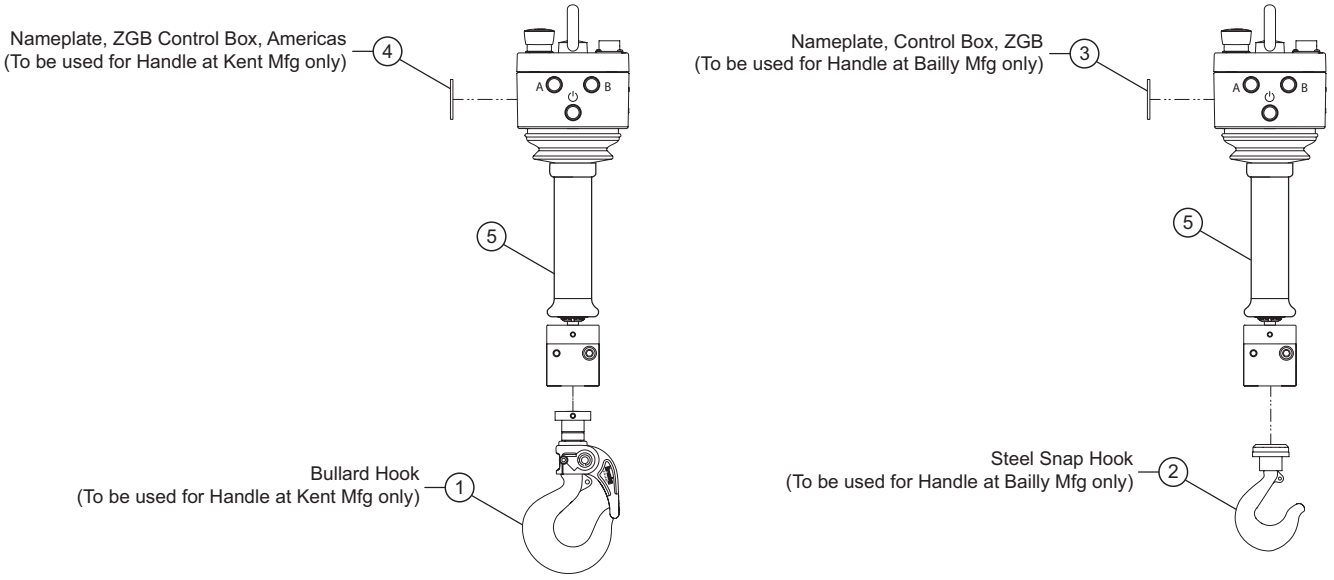

Zero Gravity Command Handle Gen 2 - Parts List

Item	Part Description	Quantity	Part Number (CCN)	Spare Part
1	Bullard Hook	1	CE110-KBB377 (03504537)	X
2	Steel Snap HooK	1	MLK-KS304 (03945649)	X
3	Nameplate, Control Box, ZGB	1	(47596414001)	
4	Nameplate, ZGB Control Box, Americas	1	(47739849001)	
5	Zero Gravity Command Handle Gen 2 without Hook	1	(47784990001)	

Zero Gravity Command Handle Gen 2 w/o Hook - Exploded View

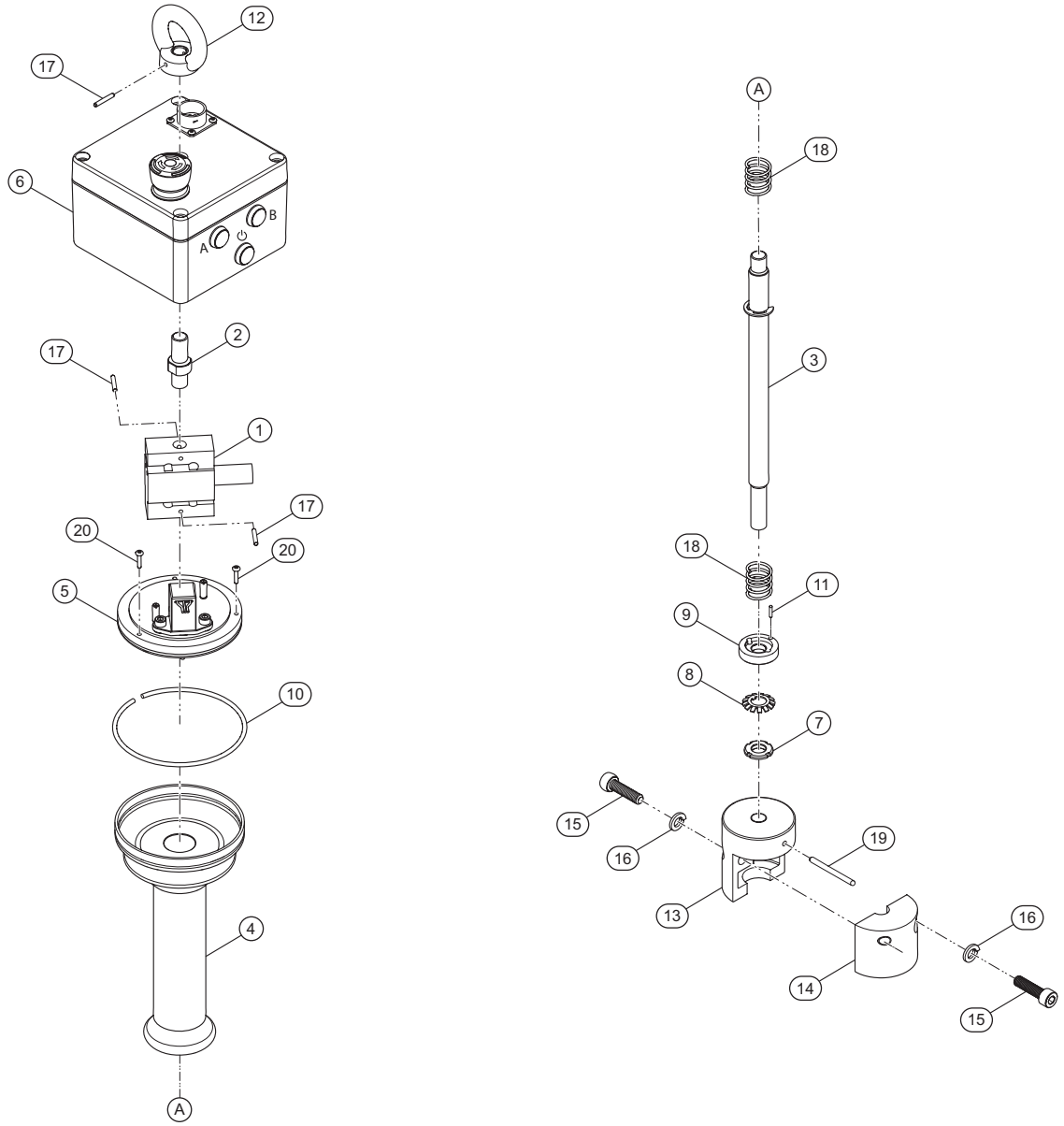

Zero Gravity Command Handle Gen 2 w/o Hook - Parts List

Item	Part Description	Quantity	Part Number (CCN)
1	UXT 500 kg Tension Load Cell	1	(47784991001)
2	Adaptor	1	(47784994001)
3	Shaft Assembly	1	(47784996001)
4	Composite Handle Assembly	1	(47784998001)
5	Bottom Plate Assembly	1	(47784999001)
6	Handle Enclosure Assembly	1	(47787985001)
7	Lock Nut	1	(47791325001)
8	Lock Washer	1	(47791326001)
9	Coupler Nut	1	(47791329001)
10	Spring Steel, 105 mm	1	(47796368001)
11	Grub Screw, M3x10	1	(47799065001)
12	Female Eye Bolt	1	(47799228001)
13	Primary Hook Shell	1	(47799229001)
14	Secondary Hook Shell	1	(47799230001)
15	Bolt, M8x30	2	(47799268001)
16	Lock Washer, M8	2	(47799269001)
17	Spring Pin (3 mm dia, 20 mm length)	3	(47800801001)
18	Spring	2	(47801365001)
19	Spring Pin (4 mm dia, 50 mm length)	1	(47801722001)
20	Bolt, M3x12	3	(47805421001)

Handle Enclosure Assembly - Exploded View

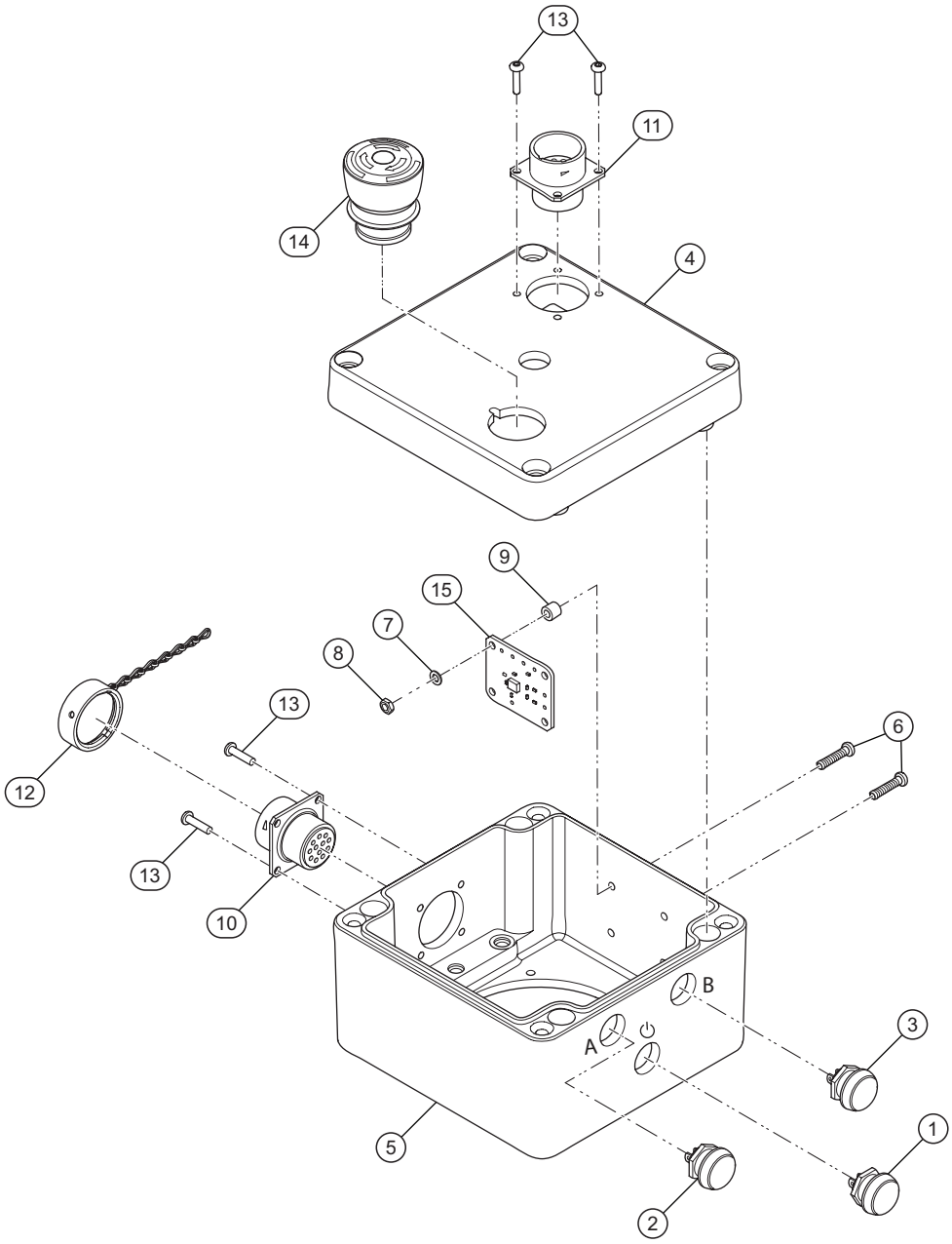

Handle Enclosure Assembly - Parts List

Item	Part Description	Quantity	Part Number (CCN)	Spare Part
1	Power Button (green)	1	RS248-8913 (47563683001)	X
2	Release Button (orange)	1	RS408-038 (47563685001)	X
3	Clamp Button (blue)	1	RS322-041 (47802734001)	X
4	Enclosure Top Plate Machined	1	(47787987001)	
5	Enclosure Bottom Plate Machined	1	(47787988001)	
6	Plastic Bolt, M3x16	4	(47798036001)	
7	Plastic Washer, M3	4	(47798037001)	
8	Plastic Nut, M3	4	(47798038001)	
9	Plastic Spacer, M3	4	(47798137001)	
10	Female Connector	1	(47801357001)	
11	Male Connector	1	(47801358001)	
12	Dust Cap	1	(47801359001)	
13	Bolt, M3x12	8	(47801360001)	
14	RS477-4890	1	RS477-4890 (47563686001)	X
15	LC-AMP Board	1	TA-ZG-499	

Bottom Plate Assembly - Exploded View

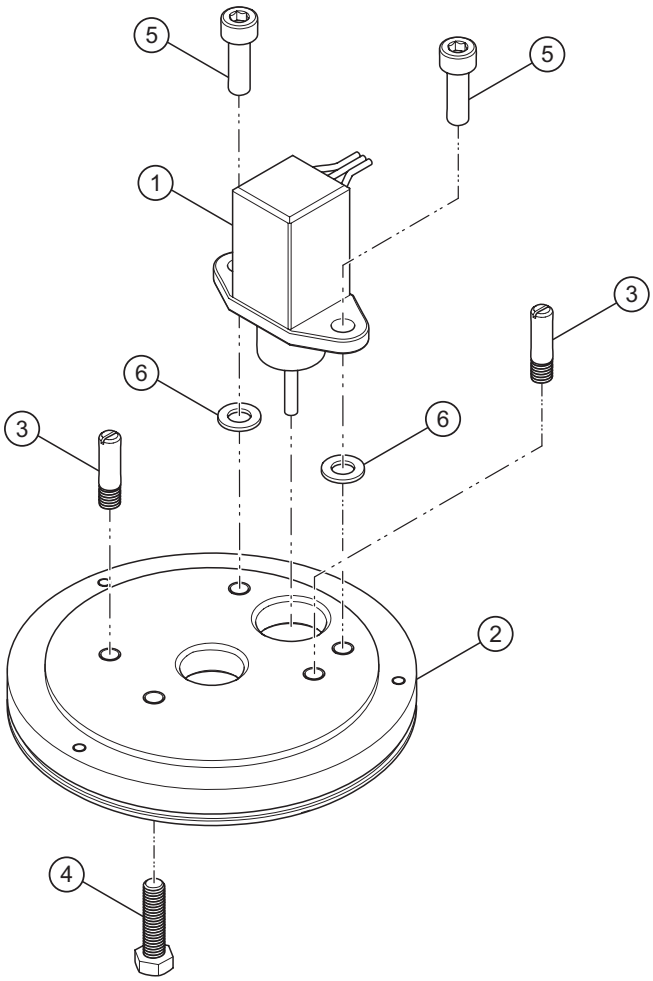

Bottom Plate Assembly - Parts List

Item	Part Description	Quantity	Part Number (CCN)	Spare Part
1	Capteur, RS	1	RS317-780 (47563682001)	X
2	Bottom Holder	1	(47785000001)	
3	Stud, M5x20	2	(47798156001)	
4	Bolt, M5x20	1	(47801361001)	
5	Bolt, M5x16	2	(47801362001)	
6	Washer, M5	2	(47802158001)	

Shaft Assembly - Exploded View

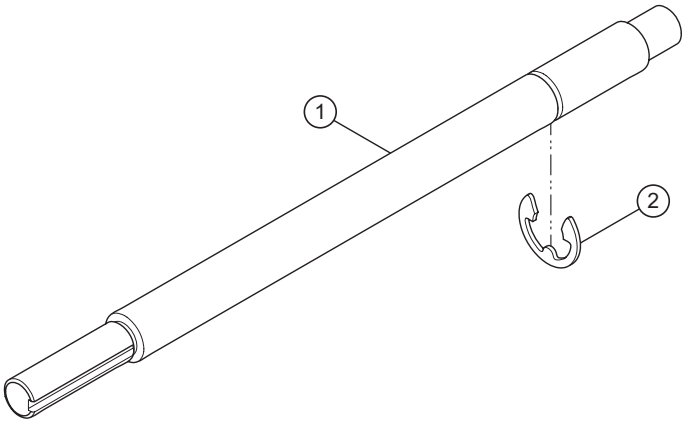

Shaft Assembly - Parts List

Item	Part Description	Quantity	Part Number (CCN)
1	Shaft	1	(47784995001)
2	Retaining Ring	1	(47796762001)

Composite Handle Assembly - Exploded View

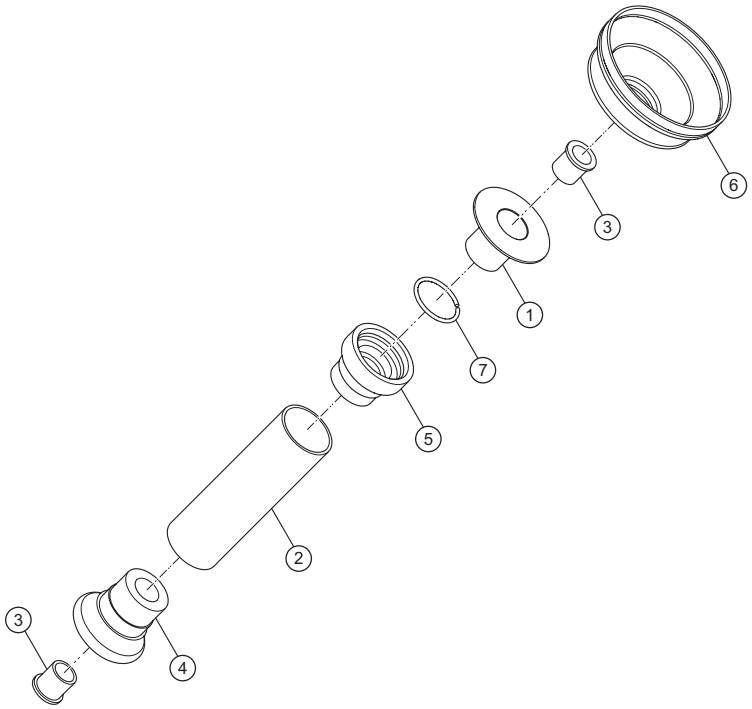

Composite Handle Assembly - Parts List

Item	Part Description	Quantity	Part Number (CCN)
1	Force Sensor Tube	1	(47784997001)
2	Composite Handle	1	(47785011001)
3	Brass Bushing	2	(47791327001)
4	Lower Cup	1	(47791331001)
5	Upper Cup	1	(47796366001)
6	Bellow	1	(47796367001)
7	Spring Steel, 35 mm	1	(47801363001)

Notes:

Notes:

ingersollrand.com

© 2023 Ingersoll Rand